AGENDA
EAST GOSHEN TOWNSHIP
BOARD OF SUPERVISORS
Tuesday, February 21, 2012

Board will meet in Executive Session from 6:00pm – 7:30pm for ABC interviews. Formal meeting will commence at 8:00pm

1. Call to Order
2. Pledge of Allegiance
3. Moment of Silence – Supervisor Carmen Battavio
4. Ask if Anyone is Recording the Meeting?
5. Public Comment – Hearing of Residents (Optional)
6. Chairman's Report
   a. Announce the Board met in executive session on February 7, 2012 to discuss a personnel matter and prior to this meeting for ABC interviews.
   b. Announce ABC appointments
7. Public Hearing - None
8. Police/EMS January 2012 Reports – 3rd Tuesday
   a. Chief Dumond – Westtown East Goshen Police
   b. Jerry Fokas, Sr. – Goshen Fire Co. President
   c. Neil Vaughn – Malvern Fire Chief
9. Financial Report – 3rd Tuesday
10. Old Business
11. New Business
    a. Consider an educational program for ABC members.
    b. Consider Cooperative Service Agreement with Animal and Plant Health Inspection Service Wildlife Services (APHIS WS)
    c. Consider signage for East Boot Road and North Chester Road Intersection
    d. Consider Mowing Agreement with PA Department of Transportation for 2012 season
    e. Consider recommendation to award Bid for Cleaning and Televising of Sanitary Sewer Lines to Pipe Data View Services
    f. Consider recommendation to amend the Defined Benefit Plan
    g.Consider attendance at CCATO's Spring Conference March 8
    h.Consider recommendation to purchase township signs
    i. Consider wireless access at the Township Building
    j. Consider approval of release of funds over $25,000
    k.Consider Sewer / Refuse Invoices
    l.Consider ABC Goals (Ranked)
12. Any Other Matter
13. Approval of Minutes
    a. February 7, 2012
14. Treasurer's Report
    a. Report – February 16, 2012
15. Review Action List – To be distributed at the meeting
16. Correspondence, Reports of Interest

a. Acknowledge Sunoco Remediation Report for 2011 4th quarter
b. Acknowledge letter from Bureau for Historic Preservation regarding Liberty Towers
c. Acknowledge letter from Preserve at Applebrook's Homeowner's Association
d. Acknowledge "Kudos to EG Public Works Department" from resident
e. Acknowledge letter from resident regarding accidents on N. Chester/352
f. Acknowledge Mark Gordon's memo regarding the Iron Hill Criterium / Enterprise Dr
g. Acknowledge Feb. 2, 2012 letter from Comcast

17. Meetings & Dates of Importance

February 22, 2012	Friends of EGT 501c3	7:00 PM
February 23, 2012	Farmers Market	3-5:00 PM
February 27, 2012	Deer Management	7:00 PM
March 6, 2012	Board of Supervisors	7:00 PM
March 7, 2012	Pension Committee	1:00 PM
March 7, 2012	Planning Commission	7:00 PM
March 8, 2012	Farmers Market	3-5:00 PM
March 8, 2012	Historical Commission	7:00 PM
March 12, 2012	Municipal Authority	7:00 PM
March14, 2012	CDC	7:00 PM
March 14, 2012	Conservancy Board	7:00 PM
March 15, 2012	Police Commission	8:00 AM
March 20, 2012	Board of Supervisors	7:00 PM
March 22, 2012	Farmers Market	3-5:00 PM
March 26, 2012	Last day to register before primary	
March 28, 2012	Friends of EGT 501c3	7:00 PM
March 31, 2012	Egg Hunt -	10:00 AM
April 1, 2012 (rain date)	EGT Park	

Summer 2012 Newsletter: Article Submission Due Date is May 2, 2012
Newsletter posted to website on July 2, 2012

18. Public Comment – Hearing of Residents
19. Adjournment

The Chairperson, in his or her sole discretion, shall have the authority to rearrange the agenda in order to accommodate the needs of other board members, the public or an applicant.

8a

MONTHLY ACTIVITY REPORT

		WESTTOWN	EAST GOSHEN	THORNBURY	TOTAL
MONTHLY ACTIVITY REPORT FOR JANUARY 2012					
UCR CLASS					
Part I	ARSONS	0	0	0	0
Part I	ASSAULTS	2	1	0	3
Part I	BURGLARY	0	0	0	0
Part I	MURDER AND MANSLAUGHTER	0	0	0	0
Part I	RAPE	0	0	0	0
Part I	RETAIL THEFT	3	0	3	6
Part I	ROBBERY	1	0	0	1
Part I	THEFTS	9	17	1	27
Part II	CRIMINAL MISCHIEF	8	7	3	18
Part II	DISORDERLY CONDUCT	14	14	4	32
Part II	D.U.I.	2	1	0	3
Part II	HARASSMENT	2	5	1	8
Part II	STOLEN VEHICLES	0	0	0	0
Part II	RECOVERED STOLEN VEHICLES	0	0	0	0
	ACCIDENTS	18	29	6	53
	FATAL	0	1	0	1
	PEDESTRIAN	0	0	0	0
	HIT & RUN	0	2	0	2
	INJURED PERSONS	3	6	0	9
	ALARMS	21	27	21	69
	AMBULANCE CALLS	36	77	7	120
	Medical Facility Ambulance calls	20	50	0	70
	ANIMAL COMPLAINTS	11	8	2	21
	ARRESTS AND CITATIONS	16	8	10	34
	BUSINESS DOOR OPEN	0	0	0	0
	DISABLED VEHICLES	6	4	0	10
	FAMILY DISTURBANCES	3	7	6	16
	FIRE CALLS	7	22	1	30
	HUNTING CALLS	0	2	0	2
	INCIDENTS	73	86	16	175
	KEYS LOCKED	3	9	1	13
	MISCELLANEOUS CALLS	10	13	3	26

	WESTTOWN	EAST GOSHEN	THORNBURY	TOTAL
MISSING PERSONS	2	2	1	5
LOCATED	2	2	1	5
MOTOR VEHICLE VIOLATIONS	64	51	16	131
911 HANG UP CALLS	5	14	5	24
PARKING VIOLATIONS	1	0	0	1
SUICIDE	0	0	0	0
SUSPICIOUS CONDITIONS	27	31	9	67
VACATION CHECKS	2	0	1	3
POLICE RADIO ROOM CALLS*	**391**	**565**	**149**	**1105**
PERCENTAGE BY INDIVIDUAL TOWNSHIPS - MONTHLY	**35%**	**51%**	**14%**	**100%**
YEAR TO DATE PERCENTAGE BY INDIVIDUAL TOWNSHIPS	**37%**	**50%**	**13%**	**100%**

NUMBERS ARE PARTIAL BREAKDOWN OF POLICE RADIO ROOM CALLS

MONTHLY ACTIVITY REPORT FOR JANUARY 2012

CAR #	YEAR/MAKE/MODEL	UNIT	USER	ENDING MILEAGE	LAST MONTH	TOTAL	DISTRICT COURT DISBURSEMENTS	AMOUNTS
67-44	2008 DODGE CHARGER	ADMINISTRATION	CHIEF DUMOND	72158	71230	928	EAST GOSHEN TWP	$2,386.02
67-30	2004 FORD CROWN VIC	DETECTIVES	DET. BRETZ	77779	76943	836	THORNBURY TWP	$1,038.92
67-55	2011 DODGE CHARGERS	DETECTIVES	DET. BALCHUNIS	13661	11847	1814	WESTTOWN TWP	$2,318.16
67-36	2006 FORD EXPEDITION	DETECTIVES	GORMAN	117110	115687	1423		
67-38	2007 FORD CROWN VIC	DETECTIVES	DET. LARGE	76434	75926	508		
67-40	2007 FORD EXPEDITION	DETECTIVES	DET. RAGNI	78404	77100	1304		
67-54	2011 FORD EXPLORER	DETECTIVES	DET/SGT. CAHILL	27740	24010	3730		
	2002 FORD EXPLORER	DETECTIVES	UNDERCOVER	87960	87960	0		
67-11	1996 JEEP CHEROKEE	DETECTIVES	UNDERCOVER	153771	153771	0		
67K90	2003 FORD CROWN VIC	K9	K-9	83726	82735	991		
67-32	2006 FORD CROWN VIC	TRAFFIC	1ST LINE PATROL	52628	52020	608		
67-42	2008 FORD EXPEDITION	TRAFFIC	1ST LINE PATROL	61220	60320	900		
67-53	2010 DODGE CHARGER	TRAFFIC	1ST LINE PATROL (UNMARKED)	15652	14905	747		
67-46	2009 DODGE CHARGER	PATROL	1ST LINE PATROL	64281	63438	843		
67-47	2009 DODGE CHARGER	PATROL	1ST LINE PATROL	OOS (accident)	81262	n/a		
67-48	2009 DODGE CHARGER	PATROL	1ST LINE PATROL	72861	66935	5926		
67-49	2009 DODGE DURANGO	PATROL	1ST LINE PATROL	68566	66596	1970		
67-50	2010 DODGE CHARGER	PATROL	1ST LINE PATROL	48948	46808	2140		
67-51	2010 DODGE CHARGER	PATROL	1ST LINE PATROL	55291	52348	2943		
67-52	2010 DODGE CHARGER	PATROL	1ST LINE PATROL (UNMARKED)	49020	45974	3046		
67-56	2011 DODGE CHARGER	PATROL	1ST LINE PATROL	8406	6397	2009		
67-57	2011 DODGE CHARGER	PATROL	1ST LINE PATROL	9157	7075	2082		
67-58	2011 FORD EXPLORER	PATROL	1ST LINE PATROL	9026	6716	2310		
					TOTAL MILES	37058		

8c

Malvern Fire Company

424 East King Street
P.O. Box 435
Malvern, PA 19355

Main 610-647-0693
Fax 610-647-0249
www.malvernfireco.com

Monthly Fire Operations Report - January 2012

Calls for Month: 34			Year Total: 34	
Call Type	**Malvern**	**Willistown**	**East Goshen**	**Other**
Accident	1	3	1	1
Automatic Fire Alarm	5	9	0	0
Cover Assignment	0	0	0	2
EMS Assist	1	1	0	0
Fire Police Assist	0	1	0	1
Helicopter Landing	0	0	0	1
Investigation (Outside)	1	0	0	0
Structure Fire	0	0	2	4
MONTH TOTAL	8	14	3	9
YEAR TOTAL	8	14	3	9

Mutual Aid	Given	Received	Month Total	Year Total
Alert Fire Co.	1	0	1	1
Berwyn Fire Co.	1	0	1	1
East Whiteland Fire Co.	6	1	7	7
Goshen Fire Co.	2	2	4	4
Newtown Sq. Fire Co.	1	0	1	1

Total Value of Property & Contents	Total Month Loss	Total Year Loss	Total Saved
0	0	0	0

Number of Personnel Attending Calls	Year Total	Hours in Service	Year Total
392	392	302.51	302.51

Number of Training Sessions	Year Total	Hours in Service	Year Total
5	5	161.5	161.5

Number of Special Assignements	Year Total	Hours in Service	Year Total
4	4	102	102

Total Hours in Service (Month)	Total Hours in Service (Year)
566.01	566.01

11a

ABC EDUCATIONAL PROGRAM

Rick Smith

rom: Senya D. Isayeff [
Sent: Friday, January 20, 2012 12:56 PM
To: rsmith@eastgoshen.org
Subject: RE: Board Governance and Leadership Development Program

I agree – please include it under New Business on the Agenda for the February 7th meeting. Thank you!

From: Rick Smith [mailto:rsmith@eastgoshen.org]
Sent: Friday, January 20, 2012 12:41 PM
To: Senya D. Isayeff
Subject: RE: Board Governance and Leadership Development Program

Tpbe 2/7/12

Senya

It would definitely help to provide an educational program for the various ABC . I think that the PC has benefited from the Master Planner Program.

A starting point would be to identify what we specific subjects (Roberts Rules of Order, effective meeting management, etc.) we want to educate the ABC members on.

Once we have done that we can look for a specific program or perhaps we could contract with a grad student at West Chester to teach a course on those subjects.

Rick Smith, Township Manager
East Goshen Township
610-692-7171

From: Senya D. Isayeff [
Sent: Friday, January 20, 2012 12:21 PM
To: rsmith@eastgoshen.org
Subject: Board Governance and Leadership Development Program

"All who have mediated on the art of governing mankind have been convinced that the fate of empires depends on the education of youth." - *Aristotle*

Rick,

Please share your thoughts on the idea of providing a Board Governance and Leadership Development Program to our ABCs.

In addition to the commercially available "off-the-shelf" programs, there are many resources (free and/or for a fee) that would further enhance the value our volunteers bring to the Township. (Please visit the following link I received from Adam Knox for an example of the various programs - http://www.neumann.edu/cclde/.)

The investment of the additional time a Program of this nature will require will, in the long run, generate huge dividends in the form of proper Board behavior, time-saving efficiencies and increased productivity.

I look forward to your thoughts,

Senya

116

WS–ER (11–09)

Agreement No:
Accounting Code:
WBS:

COOPERATIVE SERVICE AGREEMENT
Between
EAST GOSHEN TOWNSHIP (EGT)
and the
UNITED STATES DEPARTMENT OF AGRICULTURE
ANIMAL AND PLANT HEALTH INSPECTION SERVICE (APHIS)
WILDLIFE SERVICES (WS)

ARTICLE 1

The purpose of this agreement is to cooperate in a wildlife damage management project, as described in the Work Plan on the next page.

ARTICLE 2

APHIS WS has statutory authority under the Act of March 2, 1931 (46 Stat. 1468; 7 U.S.C.426–426b) as amended, and the Act of December 22, 1987 (101Stat. 1329–331, 7 U.S.C. 426c), to cooperate with States, local jurisdictions, individuals, public and private agencies, oEGTanizations, and institutions while conducting a program of wildlife services involving mammal and bird species that are reservoirs for zoonotic diseases, or animal species that are injurious and/or a nuisance to, among other things, agriculture, horticulture, forestry, animal husbandry, wildlife, and human health and safety.

ARTICLE 3

APHIS–WS and EGT agree:

1. APHIS–WS will provide the requested wildlife damage management services.
2. EGT will provide the U.S. Department of Agriculture the sum of $4,999 to cover the costs as outlined in the Financial Plan. Payment will be made by check **payable to "U.S. Department of Agriculture"** by a mutually agreed upon date.
3. EGT ensures and certifies that it is not currently debarred or suspended and is free of delinquent Federal debt.
4. The monies received by APHIS–WS will be used for wildlife damage management activities and upon termination of the agreement any unexpended funds will be retained by APHIS–WS and used on similar program activities.
5. Nothing in this agreement shall prevent APHIS–WS from entering into separate agreements with any other organization or individual for the purpose of providing wildlife damage management services exclusive of those provided for under this agreement.
6. EGT certifies that APHIS WS has advised EGT that there may be private sector service providers available to provide wildlife management services that EGT is seeking from APHIS WS.
7. The performance of wildlife damage management actions by APHIS–WS under this agreement is contingent upon a determination by APHIS–WS that such actions are in compliance with the National Environmental Policy Act, Endangered Species Act, and any other applicable environmental statutes. APHIS–WS will not make a final decision to conduct requested wildlife damage management actions until it has made the determination of such compliance.

ARTICLE 4

Pursuant to Section 22, Title 41, United States Code, no member of or delegate to Congress shall be admitted to any share or part of this Agreement or to any benefit to arise therefrom.

ARTICLE 5

APHIS assumes no liability for any actions or activities conducted under this Cooperative Service Agreement except to the extent that recourse or remedies are provided by Congress under the Federal Tort Claims Act (FTCA), (28 U.S.C. 1346(b), 2401(b), and 2671–2680).

ARTICLE 6

The Agreement shall become effective April 1, 2012 and shall continue in effect until the completion or termination of the project. This Agreement may be amended or terminated at any time by mutual agreement of the parties in writing. Further, in the event that EGT does not provide necessary funds, APHIS–WS is relieved of the obligation to provide services under this agreement.

Tax Identification Number: 23–6005479

Louis F. Smith, Jr., Township Manager
East Goshen Township
1580 Paoli Pike
West Chester, PA 19380

USDA–APHIS–Wildlife Services
PO Box 60827
Harrisburg, PA 17106–0827
717–236–9541

Louis F. Smith, Jr., Township Manager Date

State Director Date

WORK PLAN

Introduction

The U.S. Department of Agriculture (USDA) is authorized to protect American agriculture and other resources from damage associated with wildlife. The primary authorities for Wildlife Services (WS) are the Act of March 2, 1931, as amended (46 Stat. 1468; 7 U.S.C. 426–426b) and the Act of December 22, 1987 (101 Stat. 1329–331, 7 U.S.C. 426c). Wildlife Services activities are conducted in cooperation with other Federal, State and local agencies; private oEGTanizations and individuals.

The WS program uses an Integrated Wildlife Damage Management (IWDM) approach (sometimes referred to as IPM or "Integrated Pest Management") in which a series of methods may be used or recommended to reduce wildlife damage. IWDM is described in Chapter 1, 1–7 of the WS Program Final Environmental Impact Statement. These methods include the alteration of cultural practices as well as habitat and behavioral modification to prevent damage. However, controlling wildlife damage may require that the offending animal(s) are killed or that the populations of the offending species be reduced.

Wildlife Species: Canada geese

Description of Damage: Damage caused by Canada geese at EGT includes excessive droppings, overgrazing of landscaping and natural vegetation, noise disturbances, and threats to public drinking water supplies.

Location:

West Chester	Chester	East Goshen	PA
Town	County	Township	State

Location type (circle): Rural or (Urban)

Services Provided: The goal of APHIS–WS is to manage the damage caused by wildlife by implementing integrated wildlife damage management programs. EGT will continue to enforce a no feeding of waterfowl policy. EGT will be responsible for conducting harassment and deterrent strategies to reduce the presence of Canada geese on the property within the legal guidelines of the Pennsylvania Code and regulations set forth by the U.S. Fish and Wildlife Service. EGT personnel will also conduct treatment of Canada goose nests and eggs under registration with the U.S. Fish and Wildlife Service. WS professionals will also be available to provide technical assistance at the request of EGT at any time.

During summer 2012, WS will conduct two site visits to assess the local abundance of Canada geese and whether geese have molted flight feathers on the property. In consultation with EGT, WS will determine whether a population roundup is necessary. If warranted, WS will conduct a roundup and removal of up to 300 Canada geese, or 50% of the local Canada goose population. This agreement includes allotment of funding from EGT for processing of Canada geese that are removed during a roundup so that the meat will be donated for charitable food distribution.

The above WS activities are fully provided for in the PGC Bureau of Wildlife Protection (Depredation /Collecting) Permit and U.S. Fish and Wildlife Service Depredation Permit issued to the WS PA State Director. Activities will be conducted with regular and overtime hours worked as necessary to accomplish the objectives of the program.

FINANCIAL PLAN

Personnel Costs	$1,621
Travel & Vehicle Usage	$567
Supplies & Equipment	$2,116
Program Support	$695
TOTAL	**$4,999**

The distribution of the budget from this Financial Plan may vary as necessary to accomplish the purpose of this agreement, but may not exceed **$4,999**.

Financial Point of Contact

EGT:	Louis F. Smith, Jr. Township Manager	610–692–7171 Phone
APHIS–WS:	Harris Glass State Director	717–236–9451 Phone

Work and Financial Plan prepared by: G. J. D'Angelo

11c

Memo

East Goshen Township
1580 Paoli Pike
West Chester, PA 19380
Voice (610) 692-7171
Fax (610) 425-8950
E-mail rsmith@eastgoshen.org

Date: February 6, 2012
To: Board of Supervisors
From: Rick Smith, Township Manager
Re: East Boot Road and North Chester Road Intersection

As you know there was a fatal accident at this intersection about three weeks ago. In addition there was another accident, a vehicle on North Chester Road was rear ended while making a left into the school driveway in late January.

I received two calls from residents who have children at East Goshen Elementary wanting to know what could be done.

Our normal practice is to obtain 3 years worth of accident reports. These are reviewed by our traffic engineer to see if the accidents were caused by conditions of the roadway or driver error.

Note - Penn DoT has an accident warrant for traffic signals. (Essentially, you need five accidents over a twelve month period)

The police had reports for two accidents over the last three years. I sent them to Dean Kaiser (our traffic engineer) with what I knew about the fatal and the most recent accident.

With respect to North Chester Road he suggested installing side street signs (W2-2) with a street name sign under them (W16-8) on North Chester Road for both north and south bound traffic. Two such signs would be required.

He also suggested installation of a large double arrow sign (W1-7) immediately in front of the stone house in order to alert motorists that East Boot Road ends. An alternative would be the installation of the "T" symbol sign (W2-4) on East Boot Road about 100 feet before the stop sign.

W2–2

SIDE ROAD SIGN

The Side Road Sign (W2–2) shall be authorized for use in advance of a side road intersection. Its use should be restricted to intersections with roads that are improved to such an extent that there is likely to be a fairly large volume of traffic entering the through route and where poor sight distance or obscured entrances make it advisable that the intersection be called to the motorists' attention.

Too frequent use should be avoided. When an offset of two intersecting roads is more than 15 m (50'), two side road signs should be used.

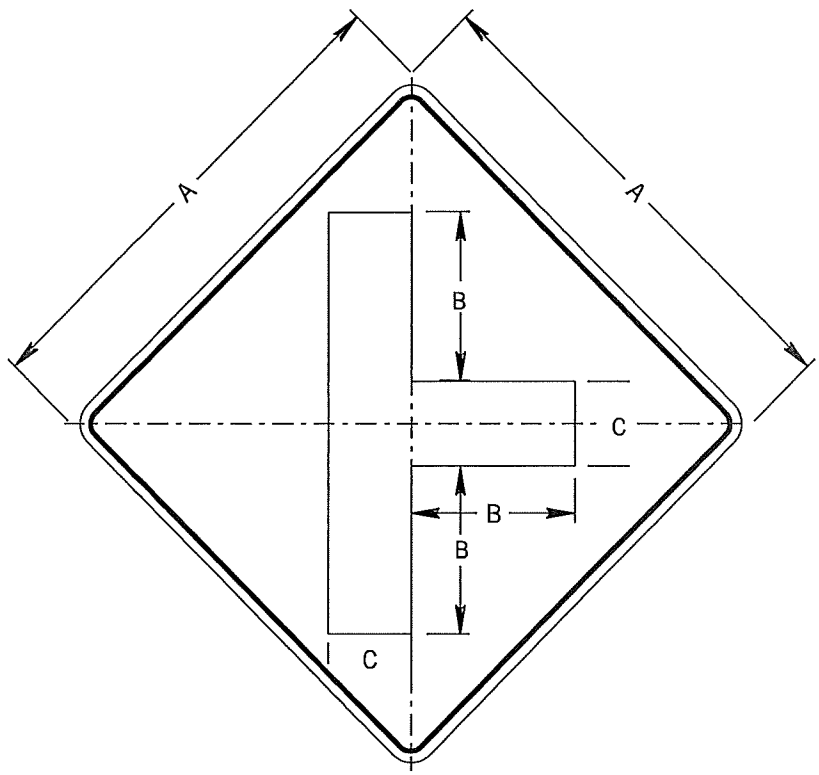

DIMENSIONS – mm (IN)					
SIGN SIZE A x A	B	C	MAR–GIN	BOR–DER	BLANK STD.
750 x 750 (30" x 30")	250 (10)	125 (5)	15 (0.6)	20 (0.8)	B3–750 (B3–30)
1200 x 1200 (48" x 48")	400 (16)	200 (8)	20 (0.8)	30 (1.2)	B3–1200 (B3–48)

COLOR:

SYMBOL AND BORDER:
BLACK (NON–REFLECTORIZED)

BACKGROUND:
YELLOW (REFLECTORIZED)

APPROVED FOR THE SECRETARY OF TRANSPORTATION

By : Glen C. Rowe Date : 01–03–06
Chief, Traffic Engineering and Operations Division
Bureau of Highway Safety and Traffic Engineering

W16–8

SINGLE–LINE ADVANCE STREET NAME SIGN

The Single–Line Advance Street Sign (W16–8) may be used beneath any intersection warning sign (W2 series) or advance traffic control sign (W3 series) to identify the name of the intersecting street. If the street name to the left is different than the one to the right, the Double–Line Advance Street Name Sign (W16–8A) should be used. The abbreviation "ST" may be changed to "RD", "LN", "CT", etc. as applicable.

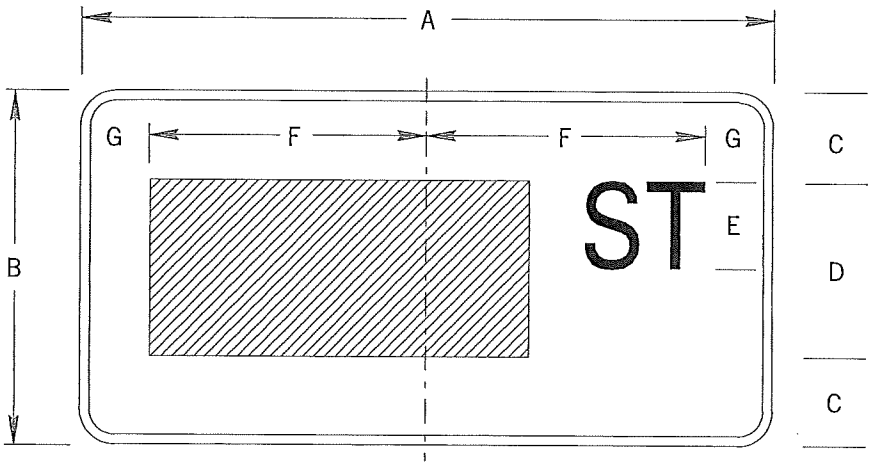

DIMENSIONS – mm (IN)								
SIGN SIZE A x B	C	D *	E	F	G **	MAR–GIN	BOR–DER	BLANK STD.
VAR x 200 (VAR x 8")	50 (2)	100 (4)	50B (2B)	VAR.	50 (2)	10 (0.4)	10 (0.4)	—
VAR x 300 (VAR x 12")	75 (3)	150 (6)	100B (4B)	VAR.	75 (3)	10 (0.4)	15 (0.6)	—

** CHOOSE UPPER/LOWER CASE ClearviewHwy FONT FOR BEST FIT

* MINIMUM SPACE

COLOR:

LEGEND AND BORDER:
BLACK (NON–REFLECTORIZED)

BACKGROUND:
YELLOW (REFLECTORIZED)

APPROVED FOR THE SECRETARY OF TRANSPORTATION

By : Glen C Rowe Date : 06–30–08

Chief, Traffic Engineering and Operations Division
Bureau of Highway Safety and Traffic Engineering

W1–7

LARGE DOUBLE ARROW SIGN

(a) Justification. The Large Double Arrow Sign (W1–7) shall be authorized for use on the far side of a "T" intersection, in line with, and at right angles to, approaching traffic. This sign shall not be used to mark the ends of median strips, center piers, and so forth, when there is no change in the direction of traffic.

(b) Size. The standard size of the W1–7 shall be 1200 mm by 600 mm (48" x 24").

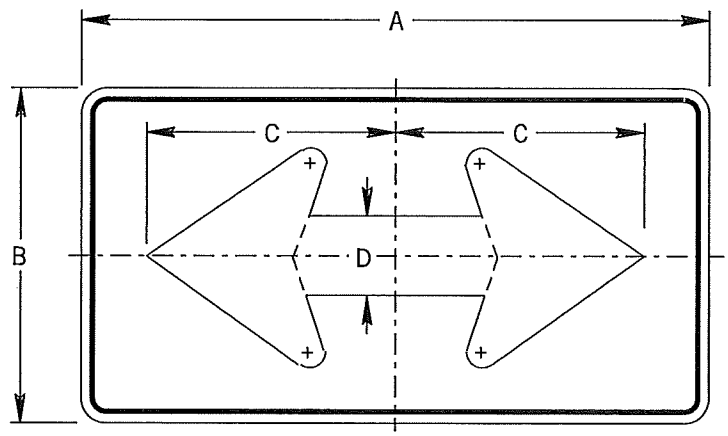

NOTE:
SEE STANDARD ARROW FOR DIMENSIONS OF ARROWHEAD

DIMENSIONS – mm (IN)					
SIGN SIZE A x B	C	D	MAR–GIN	BOR–DER	BLANK STD.
1200 x 600 (48" x 24")	515 (20.6)	165 (6.6)	15 (0.6)	20 (0.8)	B5–1200600 (B5–4824)
2400 x 1200 (96" x 48")	1025 (41)	325 (13)	20 (0.8)	30 (1.2)	———
3000 x 1500 (120" x 60")	1270 (50.8)	400 (16)	25 (1)	30 (1.2)	———

COLOR:

ARROW AND BORDER:
BLACK (NON–REFLECTORIZED)

BACKGROUND:
YELLOW (REFLECTORIZED)

APPROVED FOR THE SECRETARY OF TRANSPORTATION

By : Glen C Rowe Date : 01-03-06
Chief, Traffic Engineering and Operations Division
Bureau of Highway Safety and Traffic Engineering

W1 7.DGN

W2–4

"T" SYMBOL SIGN

The "T" Symbol Sign (W2–4) shall be authorized for use to warn traffic approaching a "T" intersection on the highway that forms the stem of the "T" such as where traffic must take a turn either to the right or the left.

A large Double Arrow Sign (W1–7) may be used at the head of the "T" directly in line with approaching traffic.

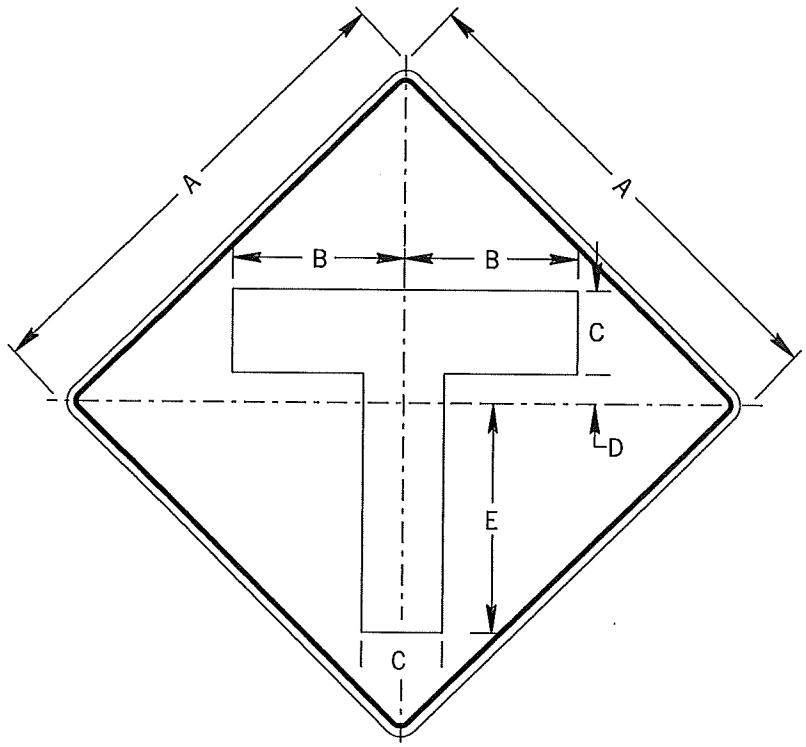

DIMENSIONS – mm (IN)							
SIGN SIZE A x A	B	C	D	E	MAR–GIN	BOR–DER	BLANK STD.
750 x 750 (30" x 30")	265 (10.6)	125 (5)	45 (1.8)	345 (13.8)	15 (0.6)	20 (0.8)	B3–750 (B3–30)
1200 x 1200 (48" x 48")	425 (17)	200 (8)	75 (3)	550 (22)	20 (0.8)	30 (1.2)	B3–1200 (B3–48)

COLOR:

SYMBOL AND BORDER:
BLACK (NON–REFLECTORIZED)

BACKGROUND:
YELLOW (REFLECTORIZED)

APPROVED FOR THE SECRETARY OF TRANSPORTATION

By : Glen C. Rowe Date : 01–03–06
Chief, Traffic Engineering and Operations Division
Bureau of Highway Safety and Traffic Engineering

W2 4.DGN

11d

RECEIVED BY: _____

FEB 8 2012

COMMONWEALTH OF PENNSYLVANIA
DEPARTMENT OF TRANSPORTATION
www.dot.state.pa.us
7000 Geerdes Boulevard
King of Prussia, PA 19406-1525

February 6, 2012

Mowing Agreement
No. 3900036479
East Goshen Township

Mr. Louis Smith
Manager
East Goshen Township
1580 Paoli Pike
West Chester, PA, 19380

Dear Mr. Smith:

Enclosed are two copies of the new mowing agreement you requested. Please have the proper township officials sign the signature page and resolutions for both agreements then return them to this office.

At the time of return of both agreement copies (with the original signatures) we will have the agreement signed by our District Administrator then forwarded to the Office of Chief Council and Comptrollers to complete the execution process.

Once we receive the executed agreement from Harrisburg, we will forward a copy to your office with a notice to proceed date.

If you have any further questions, please contact Sharon Goldberg at 610-205-6566.

Sincerely,

Nicholas A. Martino
Assistant District Executive for Maintenance

cc: L. Porrini
J. Fogel

Contract Form 18-K-221 (rev'd 1/21/11)

COMMONWEALTH OF PENNSYLVANIA
DEPARTMENT OF TRANSPORTATION

MAINTENANCE SERVICES

AGREEMENT NO 3900036479
FID #: _23-6005479_
*SAP VENDOR #*_139277__

THIS AGREEMENT, fully executed and approved this day of , , by and between the COMMONWEALTH of Pennsylvania, acting through the Department of Transportation ("COMMONWEALTH"),

AND

the East Goshen Township of
the COMMONWEALTH of Pennsylvania, acting through its authorized officials ("MUNICIPALITY").

WITNESSETH:

WHEREAS, certain public highways, including bridges with their approaches, located in the MUNICIPALITY have been adopted and taken over as part of the State Highway System, to be constructed, improved and maintained by the COMMONWEALTH, upon the terms and conditions and subject to the limitations contained in the Act of May 29, 1945, P.L. 1108; the Act of June 1, 1945, P.L. 1242; and the Act of September 18, 1961, P.L. 1389, all as supplemented and amended; and,

WHEREAS, under the provisions of Section 561 of the State Highway Law, 36 P.S. Section 670-561, added by Act 1985-92, the COMMONWEALTH may, at the discretion of the Secretary of Transportation, enter into agreements with municipalities for the latter to perform minor routine maintenance work on the roadway and shoulders of any State Highway, or portion thereof, located within the boundaries of the MUNICIPALITY; and,

WHEREAS, the COMMONWEALTH desires to obtain the assistance of the MUNICIPALITY to carry out minor routine maintenance on the State Highways listed on Exhibit "A", which is attached to and made a part of this Agreement; and,

WHEREAS, the MUNICIPALITY has the equipment, materials, and personnel available and ready to perform all the items of repair and maintenance within the MUNICIPALITY listed on Exhibit "B", which is attached to and made part of this Agreement, in a prompt and efficient manner and has signified its willingness to furnish these repair and maintenance functions, subject to payment by the COMMONWEALTH as set forth in the List of Prices in Exhibit "B".

NOW, THEREFORE, the parties hereto, for and in consideration of the foregoing premises and of the mutual promises set forth below, with the intention of being legally bound, agree as follows:

1. The MUNICIPALITY shall, in a good and workmanlike manner, perform the minor routine maintenance items at the amounts set forth in the List of Prices, all as set forth in Exhibit "B", on the State Highways located within the boundaries of the MUNICIPALITY, as listed on Exhibit "A". The MUNICIPALITY shall use equipment owned or leased by it and its own materials and personnel to perform the work. All work shall be completed in accordance with all applicable Department of Transportation Specifications ("Publication 408"), and with the policies and procedures set forth in the Highway Maintenance Foreman Manual ("Publication 113"), which are incorporated by reference into this Agreement as if physically attached.

2. The COMMONWEALTH shall pay the MUNICIPALITY for all authorized work performed on the items contracted for in Exhibit "B" as follows:
   (a) Lump sum items shall be paid on a quarterly basis.

   (b) Items performed on a unit price basis shall be paid in accordance with Paragraph 11 below.

   (c) The starting date of this Agreement shall be either the date on which the Agreement has been fully executed and approved by the COMMONWEALTH, or another date agreed to by both the MUNICIPALITY and the COMMONWEALTH, whichever is later. Further, the MUNICIPALITY shall not be permitted to start any work until notified by the COMMONWEALTH that the Agreement has been fully executed and approved.

3. The MUNICIPALITY undertakes these responsibilities as an independent contractor, and its employees and/or lessors and/or contractors are not to be considered employees of the COMMONWEALTH for any purposes. The COMMONWEALTH shall not be liable, nor shall it indemnify, defend, or save harmless the MUNICIPALITY for the negligent acts of the MUNICIPALITY'S employees and/or lessors and/or contractors during the performance of, or resulting from the performance under, this Agreement.

4. This Agreement shall be effective for the period commencing upon written notice by the COMMONWEALTH to the MUNICIPALITY and terminating on _12/31/2012, unless sooner terminated for cause upon thirty (30) days' written notice by either party to the other. Upon termination for cause, all obligations, except liability for claims arising from the MUNICIPALITY'S performance and damages incurred by the COMMONWEALTH, shall cease. In the event of termination, the MUNICIPALITY shall be paid for the work performed to the date of termination, to the extent such work has been performed in accordance with the requirements of this Agreement.

5. Work performed by the MUNICIPALITY under this Agreement shall be subject to inspection by the Secretary of Transportation, the District Engineer, and/or their duly authorized representatives within sixty (60) days of completion of the work. If, upon inspection, certain work is found not to be in conformance with the specifications, policies and procedures of the COMMONWEALTH, or is not performed in a good and workmanlike manner, the work shall be corrected or re-performed, as necessary, by the MUNICIPALITY, at no cost to the COMMONWEALTH. The COMMONWEALTH shall not be obligated to conduct an inspection program. Spot inspection or inspection of a particular project will be conducted at the discretion of the COMMONWEALTH.

6. The Pennsylvania Right-to-Know Law, 65 P.S. §§ 67.101—3104, applies to this Agreement. Therefore, this Agreement is subject to, and the MUNICIPALITY shall comply with, the clause entitled Contract Provisions – Right to Know Law 8-K-1532, attached as Exhibit "C" and made a part of this Agreement. As used in this exhibit, the term "Contractor" refers to the MUNICIPALITY.

7. The MUNICIPALITY shall comply with the following clauses or provisions attached as Exhibit "D" and incorporated herein by reference: The most current versions of the Commonwealth Nondiscrimination / Sexual Harassment Clause, the Contractor Integrity Provisions the Provisions Concerning the Americans with Disabilities Act and the Contractor Responsibility Provisions.

8. The MUNICIPALITY agrees that the COMMONWEALTH may set off the amount of any state tax liability or other obligation of the MUNICIPALITY or its subsidiaries to the COMMONWEALTH against any payments due the MUNICIPALITY under any contract with the COMMONWEALTH.

9. (a) Within ten (10) days after the effective date of this Agreement and every ninety (90) days thereafter, the MUNICIPALITY shall submit a proposed work program to the COMMONWEALTH, addressed to the Department of Transportation's local County Maintenance Manager. The MUNICIPALITY may proceed to work five (5) working days after submitting its proposed work program to the COMMONWEALTH, unless notified to the contrary.

   (b) The MUNICIPALITY may, at any time during the progress of a quarterly work program, submit, for the COMMONWEALTH'S approval, a supplemental or amended work program and may proceed to work five (5) working days after submitting such amended work program, unless notified to the contrary.

   (c) If an emergency situation arises, the Department of Transportation's local County Maintenance Manager, who shall be responsible for declaring such an emergency situation, may give verbal authorization to perform necessary additional work. The MUNICIPALITY shall promptly confirm any emergency authorization in writing. Any emergency work authorized pursuant to this paragraph shall be limited to the categories of work for which the MUNICIPALITY has assumed responsibility under this Agreement.

10. The MUNICIPALITY shall be responsible for maintenance and protection of traffic at all times during the performance of its responsibilities under this Agreement. This shall be performed in accordance with the Department of Transportation's Publication 203, entitled Work Zone Traffic Control, current edition, which the COMMONWEALTH shall make available to the MUNICIPALITY upon request.

11. The MUNICIPALITY may submit invoices at various intervals, but in no event shall invoices be submitted more frequently than on a monthly basis. Invoices shall be accompanied by a written statement certifying that the work listed in the invoice was performed properly, specifically in accordance with the specifications, policies and procedures set forth in this Agreement.

12. Because the COMMONWEALTH will be making payments under this Agreement through the Automated Clearing House ("ACH") Network, the MUNICIPALITY shall comply with the following provisions governing payments through ACH:

(a) The COMMONWEALTH will make payments to the MUNICIPALITY through ACH. Within 10 days of the execution of this Agreement, the MUNICIPALITY must submit or must have already submitted its ACH information on a ACH enrollment form (obtained at www.vendorregistration.state.pa.us/cvmu/paper/Forms/ACH-EFTenrollmentform.pdf) and electronic addenda information, if desired to the Commonwealth's Payable Service Center, Vendor Data Management Unit at 717-214-0140 (FAX) or by mail to the Office of Comptroller Operations, Bureau of Payable Services, Payable Service Center, Vendor Data Management Unit, 555 Walnut Street – 9th Floor, Harrisburg, PA 17101.

(b) The MUNICIPALITY must submit a unique invoice number with each invoice submitted. The unique invoice number will be listed on the Commonwealth of Pennsylvania's ACH remittance advice to enable the MUNICIPALITY to properly apply the state agency's payment to the respective invoice or program.

(c) It is the responsibility of the MUNICIPALITY to ensure that the ACH information contained in the Commonwealth's Central Vendor Master File is accurate and complete. Failure to maintain accurate and complete information may result in delays in payments.

13. It is understood between the parties that the maximum amount payable under this Agreement by the COMMONWEALTH to the MUNICIPALITY shall not exceed the sum of **THRE HUNDRED and FOURTY THREE DOLLARS and TWO CENTS($_343.02) dollars**, without a written supplemental agreement signed by both parties.

14. The COMMONWEALTH has implemented a Strategic Environmental Management Program (SEMP) which complies with the ISO 14001:2004 standard. As part of SEMP, the COMMONWEALTH has established a Green Plan Policy that can be found at www.dot.state.pa.us and is also posted at the COMMONWEALTH's District and County Offices. The Green Plan Policy is designed to protect the environment, conserve resources and comply with environmental laws and regulations. The MUNICIPALITY shall ensure that its personnel (including the personnel of any of its subcontractors) are aware of the COMMONWEALTH's commitment to protecting the environment, are properly trained about the environmental impacts of their work and are competent (through appropriate work experience, job training or classroom education) to perform the work that they do.

IN WITNESS WHEREOF, the parties have executed this Agreement.

ATTEST

MUNICIPALITY

_____
Title: DATE

BY _____
Title: DATE

If a Corporation, the president or Vice-president must sign and the Secretary, Treasurer, Assistant Secretary or Assistant Treasurer must attest; if a sole proprietorship, only the owner must sign; if a partnership, only one partner need sign; if a limited partnership, only the general partner must sign. If a municipality, Authority or other entity, please attach a resolution.

DO NOT WRITE BELOW THIS LINE – FOR COMMONWEALTH USE ONLY

COMMONWEALTH OF PENNSYLVANIA
DEPARTMENT OF TRANSPORTATION

BY_____
District Executive Date

APPROVED AS TO LEGALITY
AND FORM

_____
for Chief Counsel Date

Certified Funds Available Under
SAP DOCUMENT NO._____
SAP FUND_____
SAP COST CENTER_____
GL. ACCOUNT_____
AMOUNT_____
BY_____
for Comptroller Operations Date

Contract No._____, is split _____%, expenditure amount of _____ for federal funds and _____%, expenditure amount of _____ for state funds. The related federal assistance program name and number is_____; _____. The state assistance program name and SAP Fund is _____; _____.

Preapproved Form: OGC No. 18-K-221
Appv'd OAG 06/30/2010

RESOLUTION

BE IT RESOLVED, by authority of the _____
(Name of governing body)
of the _____, _____ County, and it
(Name of Municipality)

is hereby resolved by authority of the same, that the _____ of
(designate official title)

said Municipality be authorized and directed to sign the attached Agreement on its behalf.

ATTEST:

_____
(Name of Municipality)

_____ _____
(Signature and designation of official title)

By: _____
(Signature and designation of official title)

I, _____, _____
(Name) (Official title)

of the _____, do hereby certify that the foregoing
(Name of governing body and Municipality)

is a true and correct copy of the Resolution adopted at a regular meeting of the

_____, held the _____ day of _____, 20____.
(Name of governing body)

DATE: _____

_____
(Signature and designation of official title)

NOTE: Signature on the Department signature page of this Agreement must conform to the signature on this Resolution.

EXHIBIT "A"

AGREEMENT #: 3900036479 MUNICIPALITY: East Goshen Township COUNTY: Chester

STATE ROUTE

SR	Acres
003	1.10

Mow State Route 003 (West Chester Pike) from Manley Road to Ellis Lane.

The total number of acres is based on mowing four cycles for the 2012 mowing season.

The total acres for the contract period is 4.4 ACRES

EXHIBIT C

Contract Provisions – Right to Know Law 8-K-1532

a. The Pennsylvania Right-to-Know Law, 65 P.S. §§ 67.101-3104, ("RTKL") applies to this Contract. For the purpose of these provisions, the term "the Commonwealth" shall refer to the contracting Commonwealth agency.

b. If the Commonwealth needs the Contractor's assistance in any matter arising out of the RTKL related to this Contract, it shall notify the Contractor using the legal contact information provided in this Contract. The Contractor, at any time, may designate a different contact for such purpose upon reasonable prior written notice to the Commonwealth.

c. Upon written notification from the Commonwealth that it requires the Contractor's assistance in responding to a request under the RTKL for information related to this Contract that may be in the Contractor's possession, constituting, or alleged to constitute, a public record in accordance with the RTKL ("Requested Information"), the Contractor shall:

1. Provide the Commonwealth, within ten (10) calendar days after receipt of written notification, access to, and copies of, any document or information in the Contractor's possession arising out of this Contract that the Commonwealth reasonably believes is Requested Information and may be a public record under the RTKL; and

2. Provide such other assistance as the Commonwealth may reasonably request, in order to comply with the RTKL with respect to this Contract.

d. If the Contractor considers the Requested Information to include a request for a Trade Secret or Confidential Proprietary Information, as those terms are defined by the RTKL, or other information that the Contractor considers exempt from production under the RTKL, the Contractor must notify the Commonwealth and provide, within seven (7) calendar days of receiving the written notification, a written statement signed by a representative of the Contractor explaining why the requested material is exempt from public disclosure under the RTKL.

e. The Commonwealth will rely upon the written statement from the Contractor in denying a RTKL request for the Requested Information unless the Commonwealth determines that the Requested Information is clearly not protected from disclosure under the RTKL. Should the Commonwealth determine that the Requested Information is clearly not exempt from disclosure, the Contractor shall provide the Requested Information within five (5) business days of receipt of written notification of the Commonwealth's determination.

f. If the Contractor fails to provide the Requested Information within the time period required by these provisions, the Contractor shall indemnify and hold the Commonwealth harmless for any damages, penalties, costs, detriment or harm that the Commonwealth may incur as a result of the Contractor's failure, including any statutory damages assessed against the Commonwealth.

g. The Commonwealth will reimburse the Contractor for any costs associated with complying with these provisions only to the extent allowed under the fee schedule established by the Office of Open Records or as otherwise provided by the RTKL if the fee schedule is inapplicable.

h. The Contractor may file a legal challenge to any Commonwealth decision to release a record to the public with the Office of Open Records, or in the Pennsylvania Courts, however, the Contractor shall indemnify the Commonwealth for any legal expenses incurred by the Commonwealth as a result of such a challenge and shall hold the Commonwealth harmless for any damages, penalties, costs, detriment or harm that the Commonwealth may incur as a result of the Contractor's failure, including any statutory damages assessed against the Commonwealth, regardless of the outcome of such legal challenge. As between the parties, the Contractor agrees to waive all rights or remedies that may be available to it as a result of the Commonwealth's disclosure of Requested Information pursuant to the RTKL.

i. The Contractor's duties relating to the RTKL are continuing duties that survive the expiration of this Contract and shall continue as long as the Contractor has Requested Information in its possession.

Revised February 1, 2010

EXHIBIT "D"

NONDISCRIMINATION/SEXUAL HARASSMENT CLAUSE [Contracts]

The Contractor agrees:

1. In the hiring of any employee(s) for the manufacture of supplies, performance of work, or any other activity required under the contract or any subcontract, the Contractor, each subcontractor, or any person acting on behalf of the Contractor or subcontractor shall not, by reason of gender, race, creed, or color, discriminate against any citizen of this Commonwealth who is qualified and available to perform the work to which the employment relates.
2. Neither the Contractor nor any subcontractor nor any person on their behalf shall in any manner discriminate against or intimidate any employee involved in the manufacture of supplies, the performance of work, or any other activity required under the contract on account of gender, race, creed, or color.
3. The Contractor and each subcontractor shall establish and maintain a written sexual harassment policy and shall inform their employees of the policy. The policy must contain a notice that sexual harassment will not be tolerated and employees who practice it will be disciplined.
4. The Contractor and each subcontractor shall not discriminate by reason of gender, race, creed, or color against any subcontractor or supplier who is qualified to perform the work to which the contracts relates.
5. The Contractor and each subcontractor shall, within the time periods requested by the Commonwealth, furnish all necessary employment documents and records and permit access to their books, records, and accounts by the contracting agency and the Bureau of Minority and Women Business Opportunities (BMWBO), for purpose of ascertaining compliance with provisions of this Nondiscrimination/Sexual Harassment Clause. Within fifteen (15) days after award of any contract, the Contractor shall be required to complete, sign and submit Form STD-21, the "Initial Contract Compliance Data" form. If the contract is a construction contract, then the Contractor shall be required to complete, sign and submit Form STD-28, the "Monthly Contract Compliance Report for Construction Contractors", each month no later than the 15th of the month following the reporting period beginning with the initial job conference and continuing through the completion of the project. Those contractors who have fewer than five employees or whose employees are all from the same family or who have completed the Form STD-21 within the past 12 months may, within the 15 days, request an exemption from the Form STD-21 submission requirement from the contracting agency.
6. The Contractor shall include the provisions of this Nondiscrimination/Sexual Harassment Clause in every subcontract so that those provisions applicable to subcontractors will be binding upon each subcontractor.
7. The Commonwealth may cancel or terminate the contract and all money due or to become due under the contract may be forfeited for a violation of the terms and conditions of this Nondiscrimination/Sexual Harassment Clause. In addition, the agency may proceed with debarment or suspension and may place the Contractor in the Contractor Responsibility File.

EXHIBIT "D"

CONTRACTOR INTEGRITY PROVISIONS

It is essential that those who seek to contract with the Commonwealth of Pennsylvania ("Commonwealth") observe high standards of honesty and integrity. They must conduct themselves in a manner that fosters public confidence in the integrity of the Commonwealth procurement process.

In furtherance of this policy, Contractor agrees to the following:

1. Contractor shall maintain the highest standards of honesty and integrity during the performance of this contract and shall take no action in violation of state or federal laws or regulations or any other applicable laws or regulations, or other requirements applicable to Contractor or that govern contracting with the Commonwealth.

2. Contractor shall establish and implement a written business integrity policy, which includes, at a minimum, the requirements of these provisions as they relate to Contractor employee activity with the Commonwealth and Commonwealth employees, and which is distributed and made known to all Contractor employees.

3. Contractor, its affiliates, agents and employees shall not influence, or attempt to influence, any Commonwealth employee to breach the standards of ethical conduct for Commonwealth employees set forth in the *Public Official and Employees Ethics Act, 65 Pa.C.S. §§1101 et seq.*; the *State Adverse Interest Act, 71 P.S. §776.1 et seq.*; and the *Governor's Code of Conduct, Executive Order 1980-18, 4 Pa. Code §7.151 et seq.*, or to breach any other state or federal law or regulation.

4. Contractor, its affiliates, agents and employees shall not offer, give, or agree or promise to give any gratuity to a Commonwealth official or employee or to any other person at the direction or request of any Commonwealth official or employee.

5. Contractor, its affiliates, agents and employees shall not offer, give, or agree or promise to give any gratuity to a Commonwealth official or employee or to any other person, the acceptance of which would violate the *Governor's Code of Conduct, Executive Order 1980-18, 4 Pa. Code §7.151 et seq.* or any statute, regulation, statement of policy, management directive or any other published standard of the Commonwealth.

6. Contractor, its affiliates, agents and employees shall not, directly or indirectly, offer, confer, or agree to confer any pecuniary benefit on anyone as consideration for the decision, opinion, recommendation, vote, other exercise of discretion, or violation of a known legal duty by any Commonwealth official or employee.

7. Contractor, its affiliates, agents, employees, or anyone in privity with him or her shall not accept or agree to accept from any person, any gratuity in connection with the performance of work under the contract, except as provided in the contract.

8. Contractor shall not have a financial interest in any other contractor, subcontractor, or supplier providing services, labor, or material on this project, unless the financial interest is disclosed to the Commonwealth in writing and the Commonwealth consents to Contractor's financial interest prior to Commonwealth execution of the contract. Contractor shall disclose the financial interest to the Commonwealth at the time of bid or proposal submission, or if no bids or proposals are solicited, no later than Contractor's submission of the contract signed by Contractor.

9. Contractor, its affiliates, agents and employees shall not disclose to others any information, documents, reports, data, or records provided to, or prepared by, Contractor under this contract without the prior written approval of the Commonwealth, except as required by the *Pennsylvania Right-to-Know Law, 65 P.S. §§ 67.101-3104*, or other applicable law or as otherwise provided in this contract. Any information, documents, reports, data, or records secured by Contractor from the Commonwealth or a third party in connection with the performance of this contract shall be kept confidential unless disclosure of such information is:

   a. Approved in writing by the Commonwealth prior to its disclosure; or

   b. Directed by a court or other tribunal of competent jurisdiction unless the contract requires prior Commonwealth approval; or

   c. Required for compliance with federal or state securities laws or the requirements of national securities exchanges; or

   d. Necessary for purposes of Contractor's internal assessment and review; or

e. Deemed necessary by Contractor in any action to enforce the provisions of this contract or to defend or prosecute claims by or against parties other than the Commonwealth; or

f. Permitted by the valid authorization of a third party to whom the information, documents, reports, data, or records pertain: or

g. Otherwise required by law.

10. Contractor certifies that neither it nor any of its officers, directors, associates, partners, limited partners or individual owners has not been officially notified of, charged with, or convicted of any of the following and agrees to immediately notify the Commonwealth agency contracting officer in writing if and when it or any officer, director, associate, partner, limited partner or individual owner has been officially notified of, charged with, convicted of, or officially notified of a governmental determination of any of the following:

a. Commission of embezzlement, theft, forgery, bribery, falsification or destruction of records, making false statements or receiving stolen property.

b. Commission of fraud or a criminal offense or other improper conduct or knowledge of, approval of or acquiescence in such activities by Contractor or any affiliate, officer, director, associate, partner, limited partner, individual owner, or employee or other individual or entity associated with:

(1) obtaining;

(2) attempting to obtain; or

(3) performing a public contract or subcontract.

Contractor's acceptance of the benefits derived from the conduct shall be deemed evidence of such knowledge, approval or acquiescence.

c. Violation of federal or state antitrust statutes.

d. Violation of any federal or state law regulating campaign contributions.

e. Violation of any federal or state environmental law.

f. Violation of any federal or state law regulating hours of labor, minimum wage standards or prevailing wage standards; discrimination in wages; or child labor violations.

g. Violation of the *Act of June 2, 1915 (P.L.736, No. 338)*, known as the *Workers' Compensation Act,* 77 P.S. 1 *et seq.*

h. Violation of any federal or state law prohibiting discrimination in employment.

i. Debarment by any agency or department of the federal government or by any other state.

j. Any other crime involving moral turpitude or business honesty or integrity.

Contractor acknowledges that the Commonwealth may, in its sole discretion, terminate the contract for cause upon such notification or when the Commonwealth otherwise learns that Contractor has been officially notified, charged, or convicted.

11. If this contract was awarded to Contractor on a non-bid basis, Contractor must, (as required by *Section 1641* of the *Pennsylvania Election Code*) file a report of political contributions with the Secretary of the Commonwealth on or before February 15 of the next calendar year. The report must include an itemized list of all political contributions known to Contractor by virtue of the knowledge possessed by every officer, director, associate, partner, limited partner, or individual owner that has been made by:

a. Any officer, director, associate, partner, limited partner, individual owner or members of the immediate family when the contributions exceed an aggregate of one thousand dollars ($1,000) by any individual during the preceding year; or

b. Any employee or members of his immediate family whose political contribution exceeded one thousand dollars ($1,000) during the preceding year.

To obtain a copy of the reporting form, Contractor shall contact the Bureau of Commissions, Elections and Legislation, Division of Campaign Finance and Lobbying Disclosure, Room 210, North Office Building, Harrisburg, PA 17120.

12. Contractor shall comply with requirements of the *Lobbying Disclosure Act, 65 Pa.C.S. § 13A01 et seq.*, and the regulations promulgated pursuant to that law. Contractor employee activities prior to or outside of formal Commonwealth procurement communication protocol are considered lobbying and subjects the Contractor employees to the registration and reporting requirements of the law. Actions by outside lobbyists on Contractor's behalf, no matter the procurement stage, are not exempt and must be reported.

13. When Contractor has reason to believe that any breach of ethical standards as set forth in law, the Governor's Code of Conduct, or in these provisions has occurred or may occur, including but not limited to contact by a Commonwealth officer or employee which, if acted upon, would violate such ethical standards, Contractor shall immediately notify the Commonwealth contracting officer or Commonwealth Inspector General in writing.

14. Contractor, by submission of its bid or proposal and/or execution of this contract and by the submission of any bills, invoices or requests for payment pursuant to the contract, certifies and represents that it has not violated any of these contractor integrity provisions in connection with the submission of the bid or proposal, during any contract negotiations or during the term of the contract.

15. Contractor shall cooperate with the Office of Inspector General in its investigation of any alleged Commonwealth employee breach of ethical standards and any alleged Contractor non-compliance with these provisions. Contractor agrees to make identified Contractor employees available for interviews at reasonable times and places. Contractor, upon the inquiry or request of the Office of Inspector General, shall provide, or if appropriate, make promptly available for inspection or copying, any information of any type or form deemed relevant by the Inspector General to Contractor's integrity and compliance with these provisions. Such information may include, but shall not be limited to, Contractor's business or financial records, documents or files of any type or form that refers to or concern this contract.

16. For violation of any of these Contractor Integrity Provisions, the Commonwealth may terminate this and any other contract with Contractor, claim liquidated damages in an amount equal to the value of anything received in breach of these provisions, claim damages for all additional costs and expenses incurred in obtaining another contractor to complete performance under this contract, and debar and suspend Contractor from doing business with the Commonwealth. These rights and remedies are cumulative, and the use or non-use of any one shall not preclude the use of all or any other. These rights and remedies are in addition to those the Commonwealth may have under law, statute, regulation, or otherwise.

17. For purposes of these Contractor Integrity Provisions, the following terms shall have the meanings found in this Paragraph 17.

a. "Confidential information" means information that a) is not already in the public domain; b) is not available to the public upon request; c) is not or does not become generally known to Contractor from a third party without an obligation to maintain its confidentiality; d) has not become generally known to the public through a act or omission of Contractor; or e) has not been independently developed by Contractor without the use of confidential information of the Commonwealth.

b. "Consent" means written permission signed by a duly authorized officer or employee of the Commonwealth, provided that where the material facts have been disclosed, in writing, by pre-qualification, bid, proposal, or contractual terms, the Commonwealth shall be deemed to have consented by virtue of execution of this contract.

c. "Contractor" means the individual or entity that has entered into this contract with the Commonwealth, including those directors, officers, partners, managers, and owners having more than a five percent interest in Contractor.

d. "Financial interest" means:

(1) Ownership of more than a five percent interest in any business; or

(2) Holding a position as an officer, director, trustee, partner, employee, or holding any position of management.

e. "Gratuity" means tendering, giving or providing anything of more than nominal monetary value including, but not

limited to, cash, travel, entertainment, gifts, meals, lodging, loans, subscriptions, advances, deposits of money, services, employment, or contracts of any kind. The exceptions set forth in the *Governor's Code of Conduct, Executive Order 1980-18*, the *4 Pa. Code §7.153(b)*, shall apply.

f. "Immediate family" means a spouse and any unemancipated child.

g. "Non-bid basis" means a contract awarded or executed by the Commonwealth with Contractor without seeking bids or proposals from any other potential bidder or offeror.

h. "Political contribution" means any payment, gift, subscription, assessment, contract, payment for services, dues, loan, forbearance, advance or deposit of money or any valuable thing, to a candidate for public office or to a political committee, including but not limited to a political action committee, made for the purpose of influencing any election in the Commonwealth of Pennsylvania or for paying debts incurred by or for a candidate or committee before or after any election.

EXHIBIT "D"

PROVISIONS CONCERNING *THE AMERICANS WITH DISABILITIES ACT*

During the term of this contract, the Contractor agrees as follows:

1. Pursuant to federal regulations promulgated under the authority of *The Americans With Disabilities Act*, *28 C.F.R. § 35.101 et seq.*, The Contractor understands and agrees that no individual with a disability shall, on the basis of the disability, be excluded from participation in this contract or from activities provided for under this contract. As a condition of accepting and executing this contract, the Contractor agrees to comply with the "*General Prohibitions Against Discrimination," 28 C.F.R. § 35.130*, and all other regulations promulgated under *Title II* of *The Americans With Disabilities Act* which are applicable to the benefits, services, programs, and activities provided by the Commonwealth of Pennsylvania through contracts with outside contractors.

2. The Contractor shall be responsible for and agrees to indemnify and hold harmless the Commonwealth of Pennsylvania from all losses, damages, expenses, claims, demands, suits, and actions brought by any party against the Commonwealth of Pennsylvania as a result of the Contractor's failure to comply with the provisions of paragraph 1.

EXHIBIT "D"

Contractor Responsibility Provisions

For the purpose of these provisions, the term contractor is defined as any person, including, but not limited to, a bidder, offeror, loan recipient, grantee or lessor, who has furnished or performed or seeks to furnish or perform, goods, supplies, services, leased space, construction or other activity, under a contract, grant, lease, purchase order or reimbursement agreement with the Commonwealth of Pennsylvania (Commonwealth). The term contractor includes a permittee, licensee, or any agency, political subdivision, instrumentality, public authority, or other public entity in the Commonwealth.

1. The Contractor certifies, in writing, for itself and its subcontractors required to be disclosed or approved by the Commonwealth, that as of the date of its execution of this Bid/Contract, that neither the Contractor, nor any such subcontractors, are under suspension or debarment by the Commonwealth or any governmental entity, instrumentality, or authority and, if the Contractor cannot so certify, then it agrees to submit, along with its Bid/Contract, a written explanation of why such certification cannot be made.

2. The Contractor also certifies, in writing, that as of the date of its execution of this Bid/Contract it has no tax liabilities or other Commonwealth obligations, or has filed a timely administrative or judicial appeal if such liabilities or obligations exist, or is subject to a duly approved deferred payment plan if such liabilities exist.

3. The Contractor's obligations pursuant to these provisions are ongoing from and after the effective date of the Contract through the termination date thereof. Accordingly, the Contractor shall have an obligation to inform the Commonwealth if, at any time during the term of the Contract, it becomes delinquent in the payment of taxes, or other Commonwealth obligations, or if it or, to the best knowledge of the Contractor, any of its subcontractors are suspended or debarred by the Commonwealth, the federal government, or any other state or governmental entity. Such notification shall be made within 15 days of the date of suspension or debarment.

4. The failure of the Contractor to notify the Commonwealth of its suspension or debarment by the Commonwealth, any other state, or the federal government shall constitute an event of default of the Contract with the Commonwealth.

5. The Contractor agrees to reimburse the Commonwealth for the reasonable costs of investigation incurred by the Office of State Inspector General for investigations of the Contractor's compliance with the terms of this or any other agreement between the Contractor and the Commonwealth that results in the suspension or debarment of the contractor. Such costs shall include, but shall not be limited to, salaries of investigators, including overtime; travel and lodging expenses; and expert witness and documentary fees. The Contractor shall not be responsible for investigative costs for investigations that do not result in the Contractor's suspension or debarment.

6. The Contractor may obtain a current list of suspended and debarred Commonwealth contractors by either searching the Internet at **http://www.dgs.state.pa.us/** or contacting the:

Department of General Services
Office of Chief Counsel
603 North Office Building
Harrisburg, PA 17125
Telephone No: (717) 783-6472
FAX No: (717) 787-9138

11e

610-692-7171
www.eastgoshen.org

BOARD OF SUPERVISORS

EAST GOSHEN TOWNSHIP

CHESTER COUNTY
1580 PAOLI PIKE, WEST CHESTER, PA 19380-6199

February 6, 2012

To: Board of Supervisors

From: Mark Miller

Re: Bid Results for Cleaning & Televising of Sanitary Sewer Lines

Bids were opened on February 6, 2012 at 10:00am for Cleaning and Televising of Sanitary Lines , after reviewing the bids I recommend the following bid be awarded to:

Pipe Data View Services in the amount of $13,000.00

Bid results were as follows:

Pipe Data View Services	$13,000.00
Pipe Services Corp.	$20,900.00
Sewer Specialty Services Co. Inc.	$28,350.00
General Sewer Services Inc.	$30,000.00
Cleaver Cable Const. Inc.	$30,600.00
DeAngelo Brothers	$39,645.00
Tri-State Grouting, LLC	$46,200.00
Video Pipe Services, Inc.	$47,750.00
Utility Services Group, Inc.	$56,500.00
US Environmental, Inc.	$57,500.00
Mr. Rehab, Inc.	$59,900.00

2012 Bid Results for Cleaning and Televising of Sanitary Sewer Lines

Contractor	Cleaning 8"	15,000 LF	Cleaning 21"	5,000 LF	Telev. 8"	15,000 LF	Telev. 21"	5,000 LF	point repair
Pipe Data View Services Total $13,000	$0.30	$4,500	$0.30	$1,500	$0.35	$5,250.00	$0.35	$1,750.00	$1,900.00
Pipe Services Corp. Total $20,900.00	$0.42	$6,300.00	$0.62	$3,100.00	$0.42	$6,300.00	$0.62	$3,100.00	$2,100.00
Sewer Specialty Services Co. Inc. Total $28,350.00	$0.60	$9,000.00	$1.00	$5,000.00	$0.60	$9,000	$0.75	$3,750.00	$1,600.00
General Sewer Services Inc. Total $30,000.00	$0.65	$9,750.00	$1.25	$6,250.00	$0.55	$8,250.00	$1.00	$5,000.00	$750 each
Cleaver Cable Const. Inc. Total $30,600.00	$0.90	$13,500.00	$0.94	$4,700.00	$0.48	$7,200.00	$0.54	$2,700.00	$2,500.00
DeAngelo Brothers Inc. Total $39,645.00	$0.91	$13,650.00	$0.98	$4,900.00	$0.95	$14,250.00	$0.99	$4,950.00	$1,895.00
Tri-State Grouting, LLC Total $46,200.00	$1.00	$15,000.00	$2.50	$12,500.00	$0.80	$12,000.00	$1.00	$5,000.00	$1,700.00

Video Pipe Services, Inc.	$0.75	$11,250.00	$4.00	$20,000.00	$0.60	$9,000.00	$1.50	$7,500.00	$1,700.00
Total $47,750.00									
Utility Services Group, Inc.	$0.52	$7,800.00	$4.50	$22,500.00	$0.58	$8,700.00	$3.50	$17,500.00	$2,500 each
Total $56,500.00									
US Environmental, Inc.	$2.00	$30,000.00	$2.50	$12,500.00	$0.75	$11,250.00	$0.75	$3,750.00	cost + 15%
Total $57,500.00									
Mr. Rehab, Inc.	$0.75	$11,250.00	$5.85	$29,250.00	$0.75	$11,250.00	$1.35	$6,750.00	$1,400.00
Total $59,900.00									

11f

Memo

East Goshen Township
1580 Paoli Pike
West Chester, PA 19380
Voice (610) 692-7171
Fax (610) 425-8950
E-mail rsmith@eastgoshen.org

Date: February 14, 2012
To: Board of Supervisors
From: Rick Smith, Township Manager
Re: Defined Benefit Pension Plan

Under the new defined contribution pension plan a participant who has obtained the age of 62 may receive a distribution from the plan, while they are still an employee.

However, under the old defined benefit plan a participant who has obtained the age of 65 may receive the normal retirement benefit only if they retire. We have two employees who will obtain the age of 65 this year. The question is do you want to amend the defined benefit plan so that those employees can receive the normal benefit while they are still working?

I would offer that the Township's pension obligation to each of the employees under the defined benefit plan constitutes a liability. The amount the employee will receive is fixed, while the value of our assets can vary depending on market conditions. I would seem to be in our best interest to get employees off of the defined benefit plan ASAP to minimize our liability.

Recommendation – Amend the defined benefit plan to allow for distribution to a participant during employment.

F:\Data\Shared Data\Admin Dept\Pension Plan\Defined Benefit Plan\Memo 021412.doc

11g

Chester County Association
of Township Officials
P.O. Box 371 West Grove, PA 19390
(717) 633-9755 FAX:(717) 633-9463

RECEIVED
FEB 8 2012

CHESTER COUNTY SPRING 2012 CONVENTION
MARCH 8, 2012

The Annual Spring Convention of the Chester County Association of Township Officials will be held **Thursday, March 8th at the Desmond Great Valley Hotel located One Liberty Boulevard, Great Valley Corp. Center, Malvern, Pa.** Coffee and Danish will be available beginning at 8:00a.m. outside the banquet room on the main level. Exhibitor displays will be open at 8:00a.m. **The program begins at 9:00a.m. in the banquet room. There will be a table near the banquet room where you can pick up the directories. Elevators are available to get to the conference area on the third floor for the break-out sessions.** Section 1401 of the Township code permits Supervisors, Tax Collectors, Managers, Auditors, Solicitors, Engineers, Township Treasurers, and Secretaries to attend County Conventions to be reimbursed for attending.

During the general session Elam Herr from PSATS will bring us up to date on legislation. As always there will be short updates on Storm Water Management from Jan Bowers and Ronald Bailey on the County Stainable Plan.

To do a job well you need the right tools. The topics for the four break-out sessions this year have been selected to put more tools in our tool box.

10:45am (1) **"Don't Get Burned, What you need to know about Sunshine, Ethics and the Prevailing Wage"**. Two attorneys from the law office of Unruh, Turner, Burke & Frees will cover Pennsylvania's Sunshine Act, Ethics Law and Prevailing Wage Act, with an interactive discussion of the state of law, updates, challenges and trends that will benefit even the most experienced township officials.

10:45am (2) **"Communications-Its More than a Tin Can & a String"**

Panel members-Ryan Costello, Esq. County Commissioner (Facebook)
Ed Atkins, Director of Emergency Services Chester County, President SE (Ready,NotifyPA)
Ernie Holling, Supervisor West Pikeland Township (Integrating Web, e-mail and (ReadyNotifyPA)
John McLaughlin, Esq., Ballard Spahr (The Dos and Don'ts)

Today's tools to effectively communicate with your constituents can improve the dynamic in your Township. Timely and easily implemented tools are discussed and how those tools are used is the focus of Commissioner Costello, Direct Atkins and Supervisor Ernie Holling. John McLaughlin guides you through the issues in policies, practices and procedures affecting the deployment of these tools and broadening your perspective on key issues addressing policies for employee use of the web and social media.

Chester County Association of Township Officials

P.O. Box 371 West Grove, PA 19390
(717) 633-9755 FAX:(717) 633-9463

10:45am (3) **"Money-We Can't Print it, but----**

Panel members: Tredyffrin Township, East Goshen Township and Penn Township
Explore creative ideas for funding Township operations and the role that nonprofit entities may play in our future. The panel member from each township will report on their innovative steps to provide new funding sources and dialog with you about alternatives we can all consider and apply. Funding-with the housing value decline and a reduction in earned income-is far more critical than ever before as many have had to consider reductions in service to maintain the legal requirement to balance our budgets.

10:45am (4) **"Hot Topics In Municipal Employment Law"** Presenter is Christopher P. Gerber, Esquire, a partner with the law firm of Siana, Bellwoar & McAndrew, LLP located in Chester Springs, Pennsylvania.

The ultimate goal of this session is to offer practical guidance to municipal officials on how to Improve the management of their labor force and to raise awareness of the exposure to costly and disruptive litigation that should be avoided with the observance of proper protocol.

Session Topics to be Discusses:

How to Impose Discipline Without Getting Sued
First Amendment Rights of Municipal Employees and Retaliation Claims
What is a "Hostile Work Environment" and How to Address It?
Strategies and Tactics in Defense of Discrimination Lawsuits
Special Challenges in Police Department Management
Management of Personnel Files
Disability Discrimination
Employment Practices Checklist

Registration fee and convention: $65.00 per person which includes lunch. We would be appreciated if you could arrange to have payment no later than the day of the convention. Of course if this does not match up with your meeting schedule, just let me know when the check will be mailed. As in the fall printed badges will be held for your pick up upon arrival at the Convention. The table for picking up badges will be in the same location as the picking up the directories for your township. Badges rather than a meal ticket will be your admission to lunch. The week of the convention it works much better to email me at pmorrison9755@yahoo.com with any questions or changes.

DEADLINE FOR REGISTRATING TO ATTEND THE CONVENTION IS
March 2, 2012
Fax (717) 633-9463

610-692-7171
www.eastgoshen.org

11h

BOARD OF SUPERVISORS

EAST GOSHEN TOWNSHIP

CHESTER COUNTY
1580 PAOLI PIKE, WEST CHESTER, PA 19380-6199

February 15, 2012

To ; Board of Supervisors

From: Mark Miller

Re: Township Building Sign

Below are the prices to replace the sign at the township building. The current sign is in very bad shape as it has been in place for 20 years. (See picture)

- ELMARK Graphics $4,397.00
- Marsh Creek Sign $3,672.00

The two vendors also submitted pricing for the Welcome to East Goshen Township signs.

ELMARK Graphics

- 22"X 36" $1,457.00 or 4 for $1,298.00 each
- 29"X 48" $2376.00 or 4 for $2,245.00 each

Marsh Creek Signs

- 22"X 36" $1,140.00 each or 4 for $1,022.50 each
- 30"X 48" $1,825.00 each or 4 for $1,672.00 each

I would recommend we purchase a total of five signs and at the following locations

- Boot Road and Wilson Drive
- North Chester south of King Rd.
- North Chester and Manley Rd.
- Paoli Pike & Ellis Lane
- Paoli Pike & Line Rd.

1580
EAST GOSHE
TOWNSHIP

EAST GOSHEN TOWNSHIP
1580

111

Memo

East Goshen Township
1580 Paoli Pike
West Chester, PA 19380
Voice (610) 692-7171
Fax (610) 425-8950
E-mail rsmith@eastgoshen.org

Date: February 16, 2012
To: Board of Supervisors
From: Rick Smith, Township Manager
Re: Wireless Access

We have wireless access at the Township Building. The wireless service is via a Verizon FIOS account that feeds the Facebook computer and there is no connection to the Township computer system. The wireless network requires a password to access.

Several of the ABC members have approached us about obtaining access to the service so they can have internet usage for their computers and I-Pads during ABC meetings. I would note that on more then one occasion an ABC member in attendance at a Board meeting was able to access the Township web page and provide the Supervisors with an answer to a question that had arisen. However, the ABC member had to use his personal wireless service to do so and this is expensive.

My only concern (and it is not a reflection on any of the current ABC members) is what if any liability the Township would have if someone used the Township wireless service for some nefarious reason.

That being, I would suggest that we provide ABC members access to the Township wireless service and require them to execute the attached Wireless Service Agreement.

East Goshen Township
Wireless Service Agreement

_____
(Name)

_____
(ABC)

I hereby confirm that I have read the requirements related to the use of the Township Wireless Service listed below and agree to abide by them.

Internet access via the Township wireless service is provided by East Goshen Township to the members of it Authorities, Boards, and Commissions (ABCs) to assist them in performing their duties as an ABC member.

ABC members should always ensure that the information contained in e-mail messages sent via the Township wireless service are accurate, appropriate, ethical and lawful.

East Goshen Township specifically reserves the right to monitor the Township wireless service, and to retrieve and read any data or other communications composed, sent, or received through the Township wireless service.

E-mail communications that are composed, transmitted, accessed, or received by ABC members via the Township wireless service must not contain content that could be considered discriminatory, offensive, obscene, threatening, harassing, intimidating, or disruptive to any employee or other person.

Examples of unacceptable content may include but are not limited to, sexual comments or images, racial slurs, gender-specific comments, or any other comment or images that could reasonably offend someone on the basis of race, age, sex, religious or political beliefs, national origin, disability, sexual orientation, or any other characteristic protected by law.

_____ _____
(Signature) (Date)

F:\Data\Shared Data\ABC'S\general\Wireless Access.doc

11j

ROSSMORE HOMEOWNERS ASSOCIATION

427 Exton Commons
Exton, PA 19341
(610) 363-1322
Fax (610) 363-2310
Email: ccr@ccrmanagement.com
www.ccrmanagement.com

RECEIVED
BY:_____
FEB 15 2012

February 10, 2012

Mr. Louis F. Smith, Twp Manager
East Goshen Township
1580 Paoli Pike
West Chester, PA 19380

Dear Mr. Smith:

Per East Goshen Township's Resolution 08-45, this letter is to notify you that the Board of Directors for the Rossmore Homeowners Association will be reducing their escrow account to $25,000.00. The Board clearly understands if the escrow account goes below $25,000.00, that a special assessment will be required of the homeowners to bring the account balance back up to the required amount of $25,000.00.

The 12/31/11 account balance is	$25,011.29
	($25,000.00) Escrow
Total to be withdrawn	$ 11.29

Enclosed please find the financial statement identifying the interest accrued for the year. The Board will withdraw the interest in the amount of $11.29 and deposit it into the general operating fund, per Section 8.7 of the Declaration of Easements, Covenants and Restrictions. Enclosed please find bank statement and financial information for your review and records.

If you have questions, please call. Thank you.

Regards,

NEED TO APPROVE RELEASES OF FUNDS OVER $25,000.

Gus Rubbo

Enclosure

cc: Board

11 K

MEMO

To: Board of Supervisors
From: Brian McCool
Re: Sewer/Refuse Invoices
Date: February 16, 2012

It is time to order sewer/refuse invoices for the remainder of the year. We have been in contact with BFMC who provides invoices for the Township regarding ordering new invoices that include return envelopes with the address for the Lockbox.

Below is a comparison of ordering invoices with a return envelope versus ordering the invoices that we currently use:

Annual Cost for Ordering Invoices with a Return Envelope:

20,000 Invoices: $2,999.00

Annual Cost for Current Invoices:

20,000 Invoices: $1,999.00

It will cost the Township $1,000.00 more per year to include a return envelope with the sewer/refuse invoices. 50% of the cost for the sewer/refuse invoices is paid out of the Sewer Fund and the remaining 50% of the cost is paid out of the Refuse Fund.

Having a return envelope with the lockbox's address on it should eliminate a large number of sewer/refuse payments being sent to the Township Building instead of the lockbox.

11 L

Memo
East Goshen Township
1580 Paoli Pike
West Chester, PA 19380

Voice (610) 692-7171
Fax (610) 425-8950
E-mail rsmith@eastgoshen.org

Date: January 31, 2012
To: Board of Supervisors
From: Rick Smith, Township Manager
Re: ABC Goals (Ranked)

Following are the 2012 goals from the Planning Session (based on the draft minutes. The task is to prioritize them so that each ABC knows what to undertake first. I would suggest that you rank each goal either: high, medium or low. We can then tally the results on Tuesday night.

Conservancy Board

3 Increase the riparian buffer plantings throughout the Township and continue monitoring new PA state law for impacts on the Township's riparian buffer ordinance. H 1 M 3

2 Continue control of invasive plants species in Township wetlands, while leveraging past work with the Park & Recreation and Public Works Department on reforesting, understory and meadows efforts in Applebrook Park. H 3

5 Continue education of residents on good environmental practices through articles in the Township Newsletter. M 3

1 Continue looking for ways to increase recycling in the Township. H 4

6 Create environmental education for residence around storm water control, such as rain gardens and rain barrels. M 1 L 2

4 Assist the Township with implementing grants received in support of recommendations for the Stewardship Assessment by Natural Lands Trust Center for Conservation Landowners. H 2 L 2

Historical Commission

5 Update existing signage at Plank House and Blacksmith Shop. H 1 M 3

3 Install new podium sign for advertising in Historic Goshenville. L 2

2 Complete a brochure on "Battle of the Clouds" and include within the brochure a "Call for Papers on the Battle of the Clouds". H 2 M 1

1 Hold another Civil War Living History Day in June. H 2 M 1

Hold a second History Program in a Lecture Format in the Fall. M 3

Plant "Spring Garden" and develop a book of recipes for garden herbs. L 3

Continue the archiving of artifacts/reproduction items in Blacksmith Shop and Plank House. H 3

Get Facebook Page on-line. H 1 M 3

Identified Areas that need improvement

Advertising of programs and activities H 1

Increase the number of volunteers for programs and events H 1

Municipal Authority

Ongoing

Submit an article for each newsletter. H 2

Need by 2/8/12 - Kevin
Need by 5/9/12
Need by 8/8/12
Need by 11/14/12
February 2013

Attend West Goshen Meetings quarterly – more often if needed. L 2

1st Quarter (March)
2nd Quarter (June)
3rd Quarter (September)
4th Quarter (December)

Respond to capacity requests in 45 days or less. H 2

Implement I & I Plan H 4

Conduct a sewer facilities tour after RCSTP construction is complete M 1

Projects H 3

Lockwood

Bid
Pipe Installation
Abandon Plant

Marydell Pump Station

Design/Permit
Bid
Pipe Installation
Abandon Pump Station

Hershey Mill Pump station
- Design/Permit
- Bid
- Pipe Installation

Reserve Pump station
- Design/Permit
- Bid
- Pipe Installation
- Abandon Pump Station

Open House at the RCSTP 2012 after grass is fully established H 1 M 2

Park and Recreation

Frank Vattalino presented his goals for the township recreation programs for 2012:

Working with the Farmers Market to develop a walking and nutrition program M 3

Consider extending the Summer Camp from half days to full days H 4

Work with scout who will be installing a chin up station in East Goshen Park H 2

Work with Conservancy and Historical Commission Boards in providing summer camp participants with educational opportunities in summer 2012. H 2 L 2

Planning Commission

Review the Township Zoning Ordinance by Article. Amend where necessary and make recommendations for adjustments to current and/or projected conditions. H 4

Review and strengthen Planning Commission knowledge of Special Exception zoning applications. H 1 M 1 L 2

Encourage board members to enroll in continuing education courses offered by Chester County 2020. H 1 M 2

Arrange for an educational meeting(s) with a Township Zoning Hearing Board member and/or legal consultant to proactively review future concerns and refresh communications.(Topic to be determined) H 2 M 1

Schedule Planning Commission self-evaluation discussions. (Timing, frequency and purpose to be determined by commission) M 3

Initiate preliminary discussion(s) of Comprehensive Plan Update H 1 M 3

Continue the commitment to working with new Applicants in a supportive, unbiased manner ensuring that development within the township adheres to the township ordinances, furthers the goals of the comprehensive plan and contributes to the quality of life for East Goshen Township residents. H 3

13a

EAST GOSHEN TOWNSHIP
BOARD OF SUPERVISORS MEETING
1580 PAOLI PIKE
February 7, 2012 – 6:00pm
Draft Minutes

Present: Chairman Senya D. Isayeff, Vice-Chairman Thom Clapper, and Supervisors Marty Shane, Carmen Battavio and Chuck Proctor. Also present were Township Manager Rick Smith, Sue Carty (Planning Commission), Kathryn Yahraes (Historical Commission), Lisa O'Neill (Friends of East Goshen), and residents Phyllis Marron and Erich Meyer.

Executive Session

The Board met in Executive Session from 6:00pm until 7:30pm to discuss a personnel matter.

Call to Order & Pledge of Allegiance

Senya called the meeting to order at 7:35pm. He asked three ladies from Summit House to lead everyone in the Pledge of Allegiance.

Moment of Silence

Carmen called for a moment of silence to honor the troops.

Recording of Meeting

No one indicated they would be recording the meeting.

Public Comment on Non-Agenda Items

Sherri McGuinness stated that Summit House is being cited by the Township for storing metal items in a fenced area on Summit House property. Representatives from Summit House met with Mark Gordon and Rick Smith about this matter but things are "at a stalemate." Senya advised her that a Board of Supervisors' meeting is not the correct venue for this type of matter, and suggested she schedule another meeting with Mark and Rick. Senya recommended that Thom Clapper also attend the meeting to help bring about a resolution.

Chairman's Report

Senya announced that the Board met in Executive Session on January 17 and earlier this evening to discuss a personnel issue and to interview ABC candidates.

Fire Company Monthly Report

Jerry Fokas gave a report on Fire Company and EMS activities for 2011 and a Fire Company report only (no EMS) for January 2012. Jerry said he has learned the Goshen Fire Company is the second busiest fire company and EMS station in Chester County. The Easter flower sale will take place from April 6-8.

DRAFT

Bid Award for 87 Octane Gasoline

Rick reported that three bids were received for 87 Octane gasoline:

	Unit Price	Total Cost
Reilly & Sons, Inc.	$2.78 72	$5,574.40
Atlantic Coast Energy	$2.99 99	$5,998.00
Superior Plus Energy	$2.85 68 + $18.95	$6,092.60

Thom moved to award the bid for 87 Octane gasoline to Reilly & Sons, Inc. in the amount of $5,574.40 per the January 25 recommendation of Mark Miller. Carmen seconded the motion. There was no discussion or public comment. The motion passed unanimously.

Farmers' Market

Carmen moved to approve a request from the East Goshen Farmers' Market Committee to conduct the Farmers' Market on the following dates in 2012:

- May 3 through August 30 (3:00pm to 7:00pm)
- September 6 through November 1 (2:00pm to 6:00pm)
- November 8, 15 and 29 (3:00pm to 5:00pm)
- November 20 from 1:00pm to 5:00pm (Thanksgiving Market)

If the hours change, the Board of Supervisors must be notified. Thom seconded the motion. There was no discussion or public comment. The Board voted unanimously to approve the motion.

Pension Committee

Marty moved to appoint the Pension Committee as Trustee of the Post-Employee Benefit Trust and to appoint Victor Cozzone, Financial Advisor with Raymond James, as the Fund Manager. Carmen seconded the motion.

Chuck said it appears that Mr. Cozzone is new to the securities field and asked if the rest of the board is comfortable with that. Senya said Mr. Cozzone began working in the financial field in 1987. Marty said the Pension Committee has met with Mr. Cozzone for 6-8 hours in total and reviewed all his qualifications and checked his references. The Pension Committee sees no reason not to select Mr. Cozzone. Marty noted that Mr. Cozzone will receive periodic performance reviews, and there are protections and benchmarks built into the contract with Raymond James. Thom said he shared Chuck's concerns and would prefer someone with more experience. Carmen asked about the terms of the contract. Marty said the contact is for one year and it can be cancelled at any time for any reason.

There was no further discussion and no public comment. The Board voted 4:1 and the motion carried. (Thom was opposed.)

Apartment Height Ordinance

Rick summarized the proposed ordinance to amend Chapter 240 of the Township Code, titled "Zoning," Section 240-29.C(6), regulating the maximum height of apartment buildings, as

DRAFT

approved by the Planning Commission on February 1. Marty said he had no objection to going forward with this ordinance, but he would like the Township to review the height issue in all districts instead of doing it on a piecemeal basis. The rest of the Board had no objection to this ordinance and the consensus was for the staff to move forward with it.

Vision Partnership Program Grant (VPP)

Marty moved to proceed with the VPP Grant application as recommended by Mark Gordon in his February 1 memo. Carmen seconded the motion. Marty then said he would like to have an RFP sent out for this work, and Carmen agreed. Marty would also like to meet with the companies interested in doing this work. Marty and Carmen withdrew their motion. Rick will prepare an RFP for the Board's review.

Prioritization of ABC Goals

This item was tabled. The Supervisors will provide their feedback to Rick, who will compile the responses.

Online Payments

Rick summarized his memo of January 31 on this topic. He said the Board could pay for costs associated with taking online payments by 1) imposing a surcharge on all credit card users or 2) increasing the Township fees so everyone shares the cost, no matter how they pay.

Carmen suggested the Township looking into using a third-party service such as PayPal.

Thom moved to charge credit card users all charges incurred by the Township to process their payment plus 1/4 of one percent to reimburse the Township for the software license fee of $350. Carmen seconded the motion.

Public Comment: Erich Meyer, Monte Vista Drive - Stated that West Whiteland uses a third party to handle credit card transactions on its website (MuniciPAY Nationwide Payment Solutions).

Public Comment: Kathryn Yahraes, Vista Drive - Said a web-based payment system is preferable to her as a resident due to the convenience factor. She would also be willing to call the Township with her information and wait on the phone while a staff member runs her card.

The concensus of the Board was for staff to check with other municipalities to see how they handle this issue. Rick noted that Westtown imposes a 2.5% surcharge on all credit card transactions.

Thom and Carmen withdrew their motion.

ABC Educational Program

At Thom's request, the Board agreed to table this matter until the Park & Rec Board has been reconstituted.

Job Classification and Compensation Study and Analysis

Rick received six responses to his request for an RFP for this work:

Firm	Phase 1	Phase 2	Timeframe	Notes
Ackley Consulting West Chester, PA	$85,000 + expenses	$65,000	Six months	References include no muni's in PA.
Center for Social & Economic Policy Research (WCU) West Chester, PA	$24,137.28	Included in Phase 1	Completion by mid-November	References include no muni's in PA.
Condrey & Associates Athens, GA	$17,000	No cost through June 30 except for travel.	4 months	Refs include no clients from PA
Hay Group Philadelphia, PA	$41,000 to $48,000	$12,000	8-14 weeks	Extensive local experience.
Peter R. Johnson Co. West Chester, PA	$8,400 to $9,500	$4,200 to $4,700	8-10 weeks	Extensive local experience
Public Sector Personnel Consultants Columbus, OH	$15,000	No cost for follow-up technical assistance for one year.	3 months	Extensive PA experience.
Waters Consulting Group Dallas, TX	$11,700	Training not specifically included in the report.	10 weeks	Extensive experience but no clients from PA. Additional work outside scope is $200/hr. Additional onsite mtgs are $1,500 per day plus expenses.

Rick noted in his February 2 memo that the maximum cost for the Peter R. Johnson company is $200 more than the next lowest responsive proposal; however, he opined it would be easier to work with a firm in West Chester than one based in Ohio.

Marty said that due to the impact this analysis will have on the Township in the long term, he would like to have face-to-face meetings with the two most likely candidates. Marty moved to bring in representatives from both West Chester University and the Peter R. Johnson Company to be interviewed by the Board. Carmen seconded the motion.

Thom noted there is a $10,000 cost difference between West Chester University and the Peter R. Johnson Company. He also noted that the Peter R. Johnson Company has more relevant experience.

Senya noted that the Board could review the reports these firms have generated for other nearby municipalities to help in the decision-making process.

Chuck expressed concern that West Chester University's mid-November completion date would conflict with the Township's budget talks.

There was no further discussion and no public comment. The Board voted 4:1 and the motion carried. (Thom was opposed.) Rick will try to schedule the interviews for February 28.

Hershey Mill Dam

Rick summarized his memo of February 3 on this topic.

Carmen moved to accept the February 3, 2012 proposal from Edward B. Walsh & Associates in the amount of $37,160 for civil engineering and professional land surveying services necessary

to evaluate the existing dam and spillway and to provide a modified system that will meet DEP regulations. Chuck seconded the motion. There was no discussion or public comment. The Board voted unanimously to approve the motion.

Any Other Matter

Township Signage – Senya suggested the Board consider getting replacement signs for every entry point to the Township similar to the new sign just purchased to replace the one at West Chester Pike and Ellis Lane.

Community Day & Fireworks – Senya said that the ad hoc committee for Community Day has suggested June 23 as the event date. Senya would like to have arts & crafts vendors at the event this year.

New Supervisor Training – Chuck reported that he has attended the first of two sessions of PSATS New Supervisor Training in Lancaster and found it to be a great networking opportunity.

Revenue from Cell Tower - Rick summarized his memo of February 6 on this topic in regard to a separate fund being created for the revenue generated by the cell tower. Marty said the amount of revenue will not be very significant in light of the size of the Township's budget and therefore he does not think a special fund is necessary. The consensus of the Board was to put the revenue into the Operating Fund.

Resolution 2012-66 – Thom moved to adopt Resolution 2012-66 (Cafeteria Plan). Chuck seconded the motion. There was no discussion or public comment. The Board voted unanimously to approve the motion.

Finance Department Restructuring Plan – Marty moved to accept the January 17 recommendation from the Township Manager to hire a new employee with a Masters in Public Administration, Business Administration or related area, and with relevant experience to serve as the Township CFO, and to accept the proposal from West Chester University to do a candidate search at a charge of $3,000 plus expenses. Chuck seconded the motion. The Board then recessed for a 10-minute Executive Session at the request of Thom.

Public Comment: Kathryn Yahraes, Vista Drive – Asked how this will impact current staff. Marty told her one individual will be directly affected.

There was no further discussion or public comment. The Board voted unanimously to approve the motion.

Review of Minutes

The Board reviewed and corrected the draft minutes of January 7 (Annual Planning Session) and January 17. Senya said the minutes would stand approved as corrected.

Treasurer's Report & Expenditure Register Report

See attached Treasurer's Report for February 2, 2012. The Board reviewed the Treasurer's Report and the current invoices. Thom moved to accept the Treasurer's Report of February 2

and the Expenditure Register Report as recommended by the Treasurer, to accept the receipts and to authorize payment of the invoices just reviewed. Chuck seconded the motion. There was no discussion and no public comment. The Board voted unanimously to approve the motion.

Action List

Cell Tower – The agreement with Liberty Towers was executed on January 17.

Electronic Newsletter – Rick reported that the subscription database has been set up with sixty households. Payments were received from 30 households and 30 more are eligible to receive free subscriptions.

Sign Ordinance – Still under review by Planning Commission.

IT Committee – The Board reviewed an updated list of IT recommendations.

TAG Action List – The Board reviewed an updated TAG Action List.

Correspondence & Reports of Interest

Senya acknowledged receipt of the following:

- Memo from Mark Miller dated January 30 regarding tires purchased from Bain and Rudolph.
- Monthly Activity Report from Mark Miller dated January 25.
- Recreation update from Frank Vattilano dated January 26.

Meetings & Dates of Importance

Senya noted the upcoming meetings as listed in the agenda.

Public Comment Period

Erich Meyer, Monte Vista Drive – Asked about the closure of the District Court. Senya said that Judge Darlington is retiring at the end of 2013. The County has made a proposal to the State to realign district court boundaries. Under the proposal, which has not yet been approved, the District Court in East Goshen would be eliminated and its caseload absorbed by other Districts.

Kathryn Yahraes, Vista Drive -

- Noted the February 13 Municipal Authority meeting has been changed to February 20.
- Reported that the Township sign near the New Kent Apartments is still down. Rick will have Mark Gordon check into it.
- Asked if the Township has contacted PSATS or PMAA for information about how to handle online payments. Senya said the Township is looking into it.
- Asked if correspondence has gone out to the ABCs in regard to Senya's suggestion that they publish an article a month. Senya said nothing has gone out yet.
- Asked who the monthly newsletter articles should be sent to, and Rick said to Brian McCool.
- Asked about the status of the fire extinguisher in the Plank House. Rick said it's up to date. Senya asked that maintenance inquires be directed to Township staff in future.

DRAFT

- Asked who is on the ad hoc committee for Community Day. Senya said Thom Clapper, Frank Vattilano, and himself are on the committee. He added that a notice will be sent out soliciting volunteers.

Adjournment

There being no further business, the regular meeting was adjourned at 9:42pm.

Executive Session

The Board met in Executive Session until 10:00pm to discuss a personnel matter.

Anne Meddings
Recording Secretary
Attachment: Treasurer's Report

DRAFT

16a

Memo

East Goshen Township
1580 Paoli Pike
West Chester, PA 19380
Voice (610) 692-7171
Fax (610) 425-8950
E-mail rsmith@eastgoshen.org

Date: February 16, 2012
To: Board of Supervisors
From: Rick Smith, Township Manager
Re: Sunoco Remediation Report

We received the 2011 fourth quarter report from Sunoco. They have pumped and treated 182,365 gallons of ground water during this reporting period, Of the 24 test wells only 4 of them have a MTBE reading above 20 ug/l (State Limit). A complete copy of the report is available for review at the Township Building.

F:\Data\Shared Data\Property Management\53-4\53-4-2 (1431 Paoli Pike)\Sunoco\Memo to BOS 021612.doc

ENVIRONMENTAL ALLIANCE

January 31, 2012

- *Engineering*
- *Remediation*
- *Consulting*

Ms. Lauren Mapleton
Pennsylvania Department of Environmental Protection
Southeast Regional Office
2 East Main Street
Norristown, PA 19401

RE: SUNOCO STATION #0004-7969
1425 PAOLI PIKE
WEST CHESTER, PA
PADEP Facility ID No. 15-20353

RECEIVED
SE
FEB 3 2012

Dear Ms. Mapleton:

Enclosed please find the Remedial Action Progress Report prepared by Environmental Alliance, Inc. (Alliance) on behalf of Sunoco, Inc. for the above referenced site. This report is based on PA Code Title 25 Chapter 245 Requirements and presents a summary of the analytical results from the most recent groundwater sampling event conducted at this site on October 25, 2011.

Please feel free to contact the undersigned if you have any questions or comments regarding this report.

Sincerely,
ENVIRONMENTAL ALLIANCE, INC.

Robert J. Kondelin, P.G. (PG# 003265-E)
Senior Geologist

Enclosure

c: Fiona Livingston – Sunoco, Inc. (R&M)
Yvonne Monti – Sunoco, Inc. (R&M)
ICF International – T. Aubel (Claim #06-186)
Goodman Properties - Phil Gray – Phoenix GeoEnvironmental, LLC
Rick Smith – East Goshen Township

J:\EAI_files\PCG\Sun\2199_Paoli Pike\RAPR's\4Q11 RAPR\4Q11 RAPR 2199.doc

5341 Limestone Road Wilmington, DE 19808
302-234-4400 302-234-1535 Fax www.envalliance.com

	grained felsic gneiss. Depth to bedrock reported during drilling ranged from 20-feet (MW-14B) to 48-feet (MW-8B). Bedrock is gradationally overlain by a thick mantle of saprolite identified in most borings.
Groundwater Elevation:	From October 25, 2011: Shallow – 84.64 feet (MW-12) to 75.85 feet (MW-14) Deep – 84.76 feet (MW-5B) to 75.83 feet (MW-14B)
Hydraulic Gradient:	From April 2010 (last sampling event under non-pumping conditions): Shallow - 0.014 feet per foot to the northeast Deep - 0.018 feet per foot to the northeast
Hydraulic Conductivity:	4.75 feet per day (shallow); 1.75 feet per day (deep)
Groundwater Sampling Frequency:	Quarterly
Analytical Method:	Benzene, Toluene, Ethylbenzene, Total Xylenes (BTEX), Methyl tertiary-butyl ether (MTBE), Isopropylbenzene, Naphthalene via Environmental Protection Agency (EPA) Method 8260B.
Soil Quality:	Soil quality data from October 2006 dispenser sampling indicated Benzene above SHS at sample *Disp/Line 2*. Soil quality data from well installation in January 2007, indicated MTBE above SHS at MW-3 (11-12 feet).
Separate-Phase Hydrocarbons:	Separate-phase hydrocarbons (SPH) have never been detected in the site monitoring wells.

RISK ASSESSMENT

Potentially Sensitive Receptors:	There are 34 known wells identified by the Environmental Data Resources, Inc. radius report (utilizing the Federal and Pennsylvania well databases) within a 0.5-mile radius. The East Branch of Ridley Creek lies approximately 900 feet northeast of the site.
Closest Known Well:	One Federal Public Supply well was identified within a one-half mile radius to the east of the site.
Municipal Water Supply:	Aqua Pennsylvania, Inc.

SITE ACTIVITIES THIS REPORTING PERIOD

- Liquid-level data and groundwater quality samples were collected from thirteen shallow monitoring wells (MW- 1 through MW-5 and MW-7 through MW-14) and ten deep monitoring wells (MW-2B, MW-5B, and MW-7B through MW-14B) on October 25, 2011. A map depicting groundwater elevation and analytical data for the shallow (overburden) and deep (shallow bedrock) monitoring wells are included as Figures 1 and 2, respectively. Historical groundwater elevation and analytical data is summarized in Table 1. A copy of the laboratory results is included in Appendix A.

- System operations and maintenance (O&M) visits were performed throughout the reporting period. Historical dissolved-phase hydrocarbon recovery data is summarized in Table 2. Groundwater system performance graphs are included as Appendix B.
- System sampling was conducted in accordance with the National Pollutant Discharge Elimination System (NPDES) Permit for the Site. The system sampling analytical data is summarized in Table 3. Laboratory analytical reports from the system sampling are included as Appendix C.

REMEDIATION SYSTEM INFORMATION

- Type of System: Groundwater Pump and Treat System
- Permanent Operation Dates: June 28, 2010 to present
- Extraction Points: MW-1, MW-2, and MW-7B.
- Extraction Points Utilized: MW-7B.
- Recovery Equipment: Grundfos ES-7 Electric Submersible Pump
- Liquid-Phase Treatment Equipment: GeoTech Lo-Profile Air Stripper, (2) 200 lb. liquid granular activated carbon (LGAC) vessels
- Groundwater Discharge Location: Storm Sewer
- Gallons pumped and treated this Reporting Period: 182,365
- Average Groundwater Recovery Rate this Reporting Period: 1.38 GPM
- Total Groundwater Recovered to Date: 1,080,854 gallons
- Total Dissolved-Phase MTBE Recovered to Date: 77.07 pounds

FUTURE SITE ACTIVITIES

- Quarterly groundwater monitoring and sampling will continue with a sampling event scheduled in January 2012.
- Continue to operate the groundwater pump and treat remediation system with regularly scheduled O&M visits.
- Weekly O&M visits will continue in order to maintain system operational efficiency and prevent fouling of transfer pumps and address any other mineral scaling issues.
- Continue to collect bi-monthly system samples and submit monthly Discharge Monitoring Reports (DMR) in accordance with the NPDES Permit.

ATTACHMENTS

Figure 1	Groundwater Analytical and Gradient Map - Overburden (Shallow) Wells October 25, 2011
Figure 2	Groundwater Analytical and Gradient Map - Shallow Bedrock (Deep) Wells October 25, 2011
Table 1	Groundwater Elevation Data and Analytical Summary
Table 2	Dissolved Phase Hydrocarbon Recovery Data
Table 3	System Analytical Summary
Appendix A	Groundwater Sampling Laboratory Analytical Reports
Appendix B	Groundwater System Performance Graphs
Appendix C	System Sampling Laboratory Analytical Reports

Commonwealth of Pennsylvania
Pennsylvania Historical and Museum Commission
Bureau for Historic Preservation
Commonwealth Keystone Building, 2nd Floor
400 North Street
Harrisburg, PA 17120-0093
www.phmc.state.pa.us

166

RECEIVED
BY:
FEB 13 2012

2 February 2012

TO EXPEDITE REVIEW USE
BHP REFERENCE NUMBER

Chad Kayser
Advantage Engineers
1250 Wrights Lane
West Chester, PA 19380

RE: ER# 11-2453-029-B
FCC: Balloon Test, Liberty Towers Proposed 180-Foot Cell Tower, 1570 Paoli Pike, E. Goshen Twp., Chester Co.

Dear Mr. Kayser:

The Bureau for Historic Preservation (the State Historic Preservation Office) has reviewed the above named project in accordance with Section 106 of the National Historic Preservation Act of 1966, as amended in 1980 and 1992, and the regulations (36 CFR Part 800) of the Advisory Council on Historic Preservation as revised in 1999 and 2004. These regulations require consideration of the project's potential effect upon both historic and archaeological resources.

Thank you for providing the results of the balloon test for the above referenced project. The results indicate that the proposed tower will be visible within the Goshenville Historic District. Where the tower is clearly visible, a significant amount of modern development has occurred. In other places within the historic district that has not experienced modern development; the proposed tower is minimally visible. Based on this information, it is our opinion the proposed project will have no adverse effect on the National Register listed **Goshenville Historic District**. Thank you for your cooperation.

If you need further assistance in this matter, contact Ann Safley at (717) 787-9121.

Sincerely

Ann Safley for

Douglas C. McLearen, Chief
Division of Archaeology & Protection

cc: Senya D. Isayeff, Chair, Board of Supervisors, E. Goshen Twp., 1580 Paoli Pike, W. Chester, PA 19380-6199

DCMcL/ras

16c

Preserve at Applebrook Homeowner's Association

Board of Supervisors
East Goshen Township
Chester County
1580 Paoli Pike, West Chester, PA 19380-6199

February 9, 2012

Attn: Louis F. Smith, Jr, Township manager

Thank you for approving the installation of 25 MPH speed limit signs in our neighborhood and for installing 25 MPH speed limit signs on the Township property adjacent to the Preserve at Applebrook. We understand that at the January public hearing, the Township authorized the installation of the signs and provided for police enforcement of the speed limit and other traffic laws.

We understand that the cost of the neighborhood signs is $100 each or a total of $400 total. Please accept this letter as authorization to obtain and install the signs and bill the Preserve at Applebrook Homeowners Association (HOA). Please send an invoice to me or to:

Preserve at Applebrook HOA
c/of Wentworth Management
attn: Gale McGowan
901 S. Trooper Road
Norristown, PA 19403

We truly appreciate your efforts and cooperation and the work of Mark Miller on behalf of our neighborhood. Thank you both.

Sincerely;

Joe McCawley
President
810 Grist Mill Rd
West Chester, PA 19380
joe27dee@comcast.net

cc: Mr. Joe Corvino, Preserve at Applebrook HOA
Mr. Bill Creeger, Pulte Homes
Ms. Gale McGowan, Wentworth Property management
Ms. Winnie Stroup, Preserve at Applebrook HOA

16 d.

Mark Miller

From: McAlonie, Daniel A. [
Sent: Thursday, February 09, 2012 3:28 PM
To: sisayeff@eastgoshen.org; mshane@eastgoshen.org; cbattavio@eastgoshen.org
Cc: mmiller@eastgoshen.org
Subject: Kudos to EG Public Works Dept

Good day all,

I wanted to take this opportunity to commend the responsiveness and work of the EG Public Works team.

To summarize, yesterday morning I had an unfortunate situation where the sewer line became backed up. I called the township around 9am and they immediately got in touch with Mark Miller. Mark and a crew member showed up within minutes to evaluate the situation. Mark put a plan in place and determined that they needed to dig out to look at and replace some of the piping. His responsiveness and dedication were just terrific. The various crews showed up at various times yesterday to mark utility lines. The EG crew showed up early today and have already finished the necessary repair work on the sewer line.

Job well done by the EG PW department! Thanks again to Mark and his team.

p.s. I'll be following up with the BOS on another matter (overgrown Sycamore trees). Mark suggested I write to the BOS for support. It will follow shortly.

Thanks and best regards,

Dan

Daniel McAlonie

16e

February 3, 2012

To: Westown-East Goshen Police Department
Attn. – Traffic Safety Management

From: Thomas J. Krinock/[illegible]'E. Goshen Twp.

Re: Speed Limit/Accidents – N. Chester Rd/Rte. 352/E. Goshen Twp.

Another accident occurred (1/28/2001) on N. Chester Road/Rte. 352 between Forest and Brookmont.

With the number serious accidents in this short area of E. Goshen Twp., it definitely feels that the 40 speed limit now is actually 50-55 in this area.

Requesting your consideration on the following:

1) More **Police presents** to better control **South/North** speeding.
   - South drivers are hitting 50-55 (begin Forest) and then hit a sharp curve.
   - North drivers have 35 speed limit below King St but in E. Goshen posted 40 but immediately hit a sharp curve.

2) Consider placing **Speed Limit/Actual Speed Trailer**. (Open areas in front of Reserve at Spring Meadow subdivision.)

3) **Reduce Speed Limit to 35** –to same as below King St. /E. Whiteland.

The feeling is that this area is becoming more dangerous to commuters and residents, and would appreciate your considering more action. Thank you.

cc. – Rick Smith/Twp. Manager/E. Goshen

RECEIVED
BY: _____
FEB 3 2012

16f

Memorandum

East Goshen Township
1580 Paoli Pike
West Chester, PA 19380
Voice: 610-692-7171
Fax: 610-692-8950
E-mail: mgordon@eastgoshen.org

Date: 2/17/2012
To: Board of Supervisors
CC: Mark Yoder, GWCC
Community Development Commission
From: Mark Gordon, Township Zoning Officer mlG
Re: Iron Hill Twilight Criterium / Enterprise Drive

Board Members,

As you know, the CDC is working with the Greater West Chest Chamber of Commerce to determine the feasibility of using Enterprise Drive on July 9, 2012 for the Iron Hill Twilight Criterium bicycle race time trials. As I understand it, the CDC has approached all the businesses in the park with favorable results. The main concerns of the businesses on Enterprise Drive relate to the impact that this event could cause to their operations, specifically access to and from the park for their employees and deliveries. Businesses in the corporate park conduct operations on Saturdays so closing the street does not appear to be an option. We need to provide them with access during the event.

To date, the staff has identified the following issues that need to be addressed:

1. What liability do property owners have with an event like this and how does the race promoter handle issues or injuries to racers and or spectators if they occur on private property?
2. Liability to Township for racing on a Township Street? How is this handled by the race promoter?
3. Traffic Flow
    a. How will traffic entering the corporate park be handled?
    b. How will traffic exiting the corporate park be handled?
    c. Is it be possible to leave the outside lane of Enterprise Drive open for one way vehicle traffic?
4. How many police officers will be needed to work the event? Who is paying?
5. Will they require fire police for traffic control? Who will be paying for this service?
6. How much parking is required?
    a. Participant parking
    b. Spectator parking
    c. Where are these parking areas?
7. Is there a racer staging area? Where?

8. Restrooms?
9. Will you need temporary signage?
10. Will there be vendors for food, drinks, etc?

We have provided a copy of this memo to Mr. Yoder and asked him to attend the Board's meeting on March 6, 2012 to provide a status update on these issues.

169

Comcast

Kevin C. Broadhurst
Senior Director of Government Affairs
5 Bellecor Drive
New Castle, DE 19720
Ph: 302.661.4420

FEB 13 2012

February 2, 2012

Louis F. Smith, Jr.
East Goshen Township
1580 Paoli Pike
West Chester, PA 19380

Dear Louis F. Smith, Jr.:

On April 10, 2012, we will take the final step in our digital network enhancement by converting all remaining analog channels to digital. Following this enhancement Comcast Customers will receive even more channels; crisp digital picture and sound on every TV and all of your channels in a high quality digital format.

In order to bring customers these new features, all Comcast video services will be transmitted exclusively in digital format on April 10, 2012. **This means that customers will need to have a digital set-top box or digital adapter from Comcast, or a third party device with a CableCARD™ for each television on which they wish to continue receiving Comcast video services.**[1]

In order to make this enhancement as seamless as possible for our customers, Comcast will provide customers digital equipment in accordance with their service tier. Comcast will provide up to three digital adapters to its current Basic-tier customers at no additional cost. Customers who subscribe to higher tiers of service will be provided up to one digital set-top box and two digital adapters at no additional cost. Customers to bulk service contracts will receive digital equipment in accordance with their contract terms. Customers who would like more than the digital equipment included as part of their video service package may obtain additional equipment of their choice at the standard charge of $1.99 ($0.50 for Limited Basic customers) for each additional digital adapter and $9.25 for each additional digital set-top box.[2]

Comcast customers may call us toll-free at 1-877-634-4434, go on-line at www.comcast.com/digitalnow, or visit a Comcast service center to determine the best solution for their home.

Enclosed please find a copy of the notice we are providing to our customers. Comcast customers will receive multiple notifications; all of which provide further detailed information regarding Comcast's digital improvements.

As always, if you have any questions or concerns regarding this program, or any other matter, please feel free to contact Jen Boyett at 610.350.0155, or you may reach me at 302.661.4420.

Sincerely,

Kevin Broadhurst

Kevin Broadhurst
Comcast

---

[1] Customers with QAM Tuner televisions will continue to be able to receive only Limited Basic channels without a digital device. In order to see any channels other than Limited Basic, QAM tuner TVs will also need a digital device. The Limited Basic channel line-up varies by area but in general includes local broadcast TV stations plus local government, education, and public access channels.

[2] All pricing and offers subject to change.

We're upgrading our network – make sure you have digital equipment for *all* of your TVs at

[SERVICE ADDRESS INFORMATION]

xfinity®

Update on Network Upgrade for:

John Q. Sample
123 Any Street
Apt. 1-A
Anytown, US 12345-6789

Unique Digital ID #: [XXXX-XXXX-XXXX-XXXX]
Account #: [XXXXXXXXXXXX]
Home Phone #: [XXX-XXX-XXXX]

FIND THE LATEST NETWORK UPGRADE NEWS AT comcast.com/digitalnow

Our network upgrade to an all-digital platform will soon be complete, providing you with channels broadcasted exclusively in digital format – so you can enjoy your favorite programs in crisp digital picture and sound.

But first, you'll need to verify that you have the right digital equipment for each of your TVs. **Without the right digital equipment, you will lose your current channels.**

Here's how easy it is:

1 Check your TVs for digital equipment

DIGITAL SET-TOP BOX

DIGITAL ADAPTER

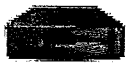

Actual equipment may vary.

To continue receiving all of your current channels, you should check each TV in your home to see if it's connected to a digital set-top box, digital adapter or CableCARD™ device (like a TiVo). If it is, that TV **does not** need any additional equipment.

If *all* of your TVs are connected to a digital set-top box, digital adapter or CableCARD device, there's nothing you need to do!

If you still need digital devices, go to steps 2 and 3.

2 Order equipment at comcast.com/digitalnow

- Have your Unique ID or account # handy (at the top of this letter)
- **Receive up to two digital adapters at no additional monthly service charge**
- There's no charge for shipping this order, and it's easy to install. Professional installation is available at an additional charge
- Additional adapters are $0.50 each per month
- You can also order your equipment by calling 1-877-634-4434

3 Activate your equipment

It's easy — visit **comcast.com/digitalnow**; you'll find helpful tips, FAQs and step-by-step self-installation videos.

The digital adapter provides:

- All your current channels in crisp digital picture and sound
- Access to more channels like ABC Live Well, NBC Non-Stop, Antenna and This TV

WITH XFINITY, YOU'LL HAVE ACCESS TO:

- Faster Internet
- More HD channels
- TV on your computer
- An On Demand library with over 60,000 titles

Order before April 10, 2012 and prepare for XFINITY®!

XFINITY service not available in all areas. Limited to residential customers receiving Digital service. Digital set-top box and remote required to receive On Demand and HD services. Access to HD channels requires an HD set-top box at an additional cost. Pricing subject to change. Applicable equipment, installation, taxes and franchise fees extra. Call for details. ©2012 Comcast. All rights reserved.

ChesterCounty-B1-CFRLP1DE

Comcast.